685-PK SH1

CONFIDENTIAL NOTICE: This drawing and the designs, specifications and engineering information disclosed hereon are the property of Eberhard Manufacturing Company and are not to be downstreamed or reproduced without express written consent. The drawing is issued in confidence and does not for consideration of the matter disclosed hereon. In accepting form of this drawing, recipient agrees to keep it and the matter disclosed hereon in confidence and not to use nor permit their use in any way adversarial to Eberhard Manufacturing Company, Division of the Eastern Company. 21994 Drake Road, Cleveland, Ohio 44149-9712 © 2002 EBERHARD MFG. CO.

NO	CHANGE	ENG.NO.	DATE
	RELEASED, ENG 14-07/02	EN 5080	6-19-03
1	REVISED NEWS TO DETAIL, REVISED DIMENSIONS	EN 5085	5-2-03
2	REVISED NEWS TO DETAIL REVISED CHANGES	EN 5102	6-30-03
3	REVISED NOTES, REVISED NEWS TO DETAIL	EN 5106	7-18-03

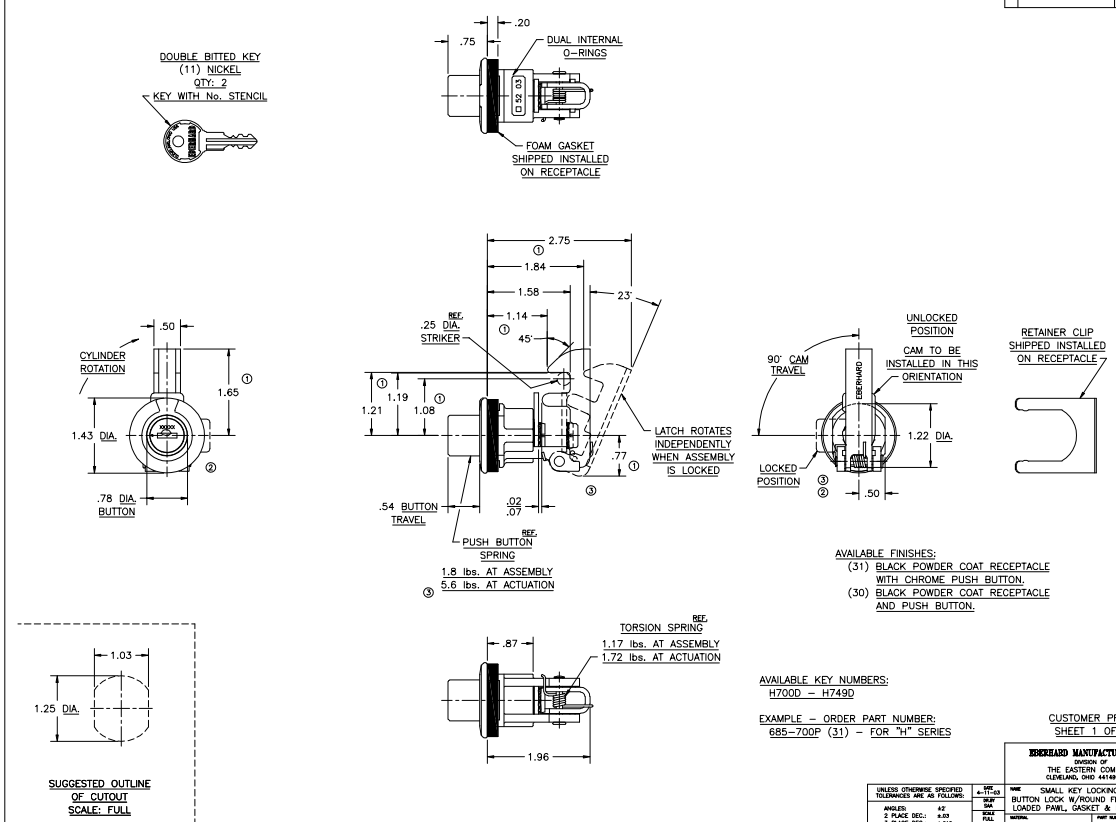

AVAILABLE FINISHES:
(31) BLACK POWDER COAT RECEPTACLE WITH CHROME PUSH BUTTON.
(30) BLACK POWDER COAT RECEPTACLE AND PUSH BUTTON.

AVAILABLE KEY NUMBERS:
H700D – H749D

EXAMPLE – ORDER PART NUMBER:
685-700P (31) – FOR "H" SERIES

CUSTOMER PRINT
SHEET 1 OF 2

EBERHARD MANUFACTURING CO.
DIVISION OF
THE EASTERN COMPANY
CLEVELAND, OHIO 44149-9712

UNLESS OTHERWISE SPECIFIED TOLERANCES ARE AS FOLLOWS:	DATE 4-17-03	NAME SMALL KEY LOCKING PUSH BUTTON LOCK W/ROUND FLANGE, SPRING LOADED PAWL, GASKET & RETAINER CLIP	
ANGLES: ±2°	DRAW SHA		
2 PLACE DEC.: ±.03	SCALE FULL		
3 PLACE DEC.: ±.015	CHK'D BY	MATERIAL ----------	PART NUMBER 685-PK
ALL HOLES: ±.005			