The BI-FIX quarter-turn fastener

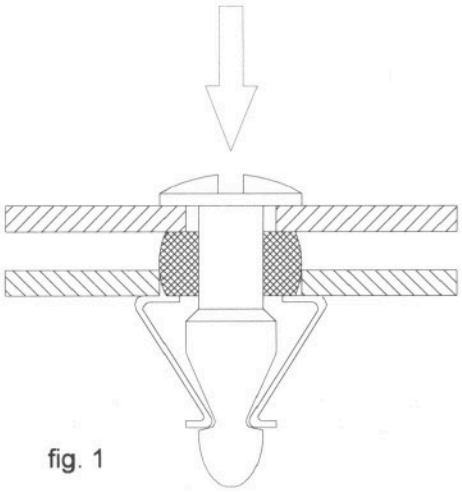

fig. 1

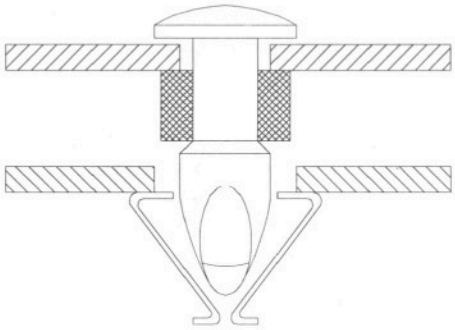

fig. 2

Functional characteristics

The **BI-FIX** quarter-turn fastener is used for securing panels and components where accessibility is important (fig. 1). The special characteristic of the **BI-FIX** quarter-turn fastener is its quick and simple detachability. A 90°- turn of the Stud unlocks the connection (fig. 2), finger pressure onto the head of the Stud reclicks the Fastener into the locked position.

The **BI-FIX** quarter-turn fastener can be used wherever 2 elements have to be fastened and detached in a quick and safe manner. The **BI-FIX** quarter-turn fastener is the ideal solution to facilitate the maintenance of machines, installations and devices as well as to guarantee a higher degree of handling.

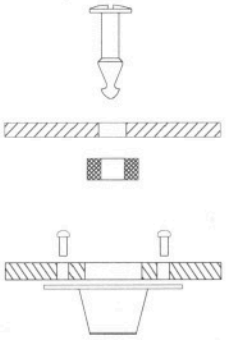

The most simple **BI-FIX** quarter-turn fastener consists of 3 parts:

- ☐ the Stud, which is located in the panel (loose part),
- ☐ the Washer, which fixes the Stud in a way it can not be lost,
- ☐ the ,Spring Clip, which is firmly installed to the shell.

Finger pressure on top of the head of the Stud is sufficient to click the Fastener into the locked position. In locked position, the two sides of the Clip seize the notches of the StudThis connection cannot be opened by vibration or shocks, unless they reach some 100 g (acceleration due to gravity). In case of axial tensions the connection becomes more and more form-fit, until the Clip breaks by reaching the braking load (see technical ratings).

EUROPA FASTENERS GmbH
Otto-Hahn Straße 10 · D-71083 Herrenberg
Phone: +49 7032 93 84 0 · Fax: +49 7032 93 84 41
info@eufa.de · www.europa-fasteners.com

There are different methods of fix the Spring Clip to the fixed part. The construction of the Spring Clip ensures, that the Stud is ejected automatically when turned 90°. Separation of the loose part from the fixed part occurs at this point.

The **BI-FIX** quarter-turn fastener is manufactured in 3 sizes. The actual use depends on the occuring forces, as well as on the geometrical data.

Choice of the components

To find out the appropriate components of the **BI-FIX** quarter-turn fastener for a certain kind of use (examples of use, see outer leaf of the actual size), see example shown below:

1. Forces and holes

The size of the fastener is determined by the occuring forces (see table of forces) or by already existing holes.

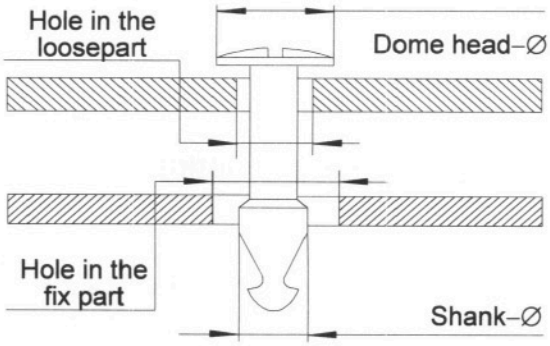

Table of forces (force in [N], dimensions in [mm])					
Size	Nominal Load	Breaking Load	Dome head–∅	Hole in the **loose** part	Hole in the **fixed** part
"08"	80	300	8	4.0 - 4.5	7.5 - 8.0
"11"	300	900	11	6.5 - 7.0	11.5 - 12.0
"16"	900	2700	16	10.0 - 10.5	15.5 - 16.0

2. Standard heads and material of the Stud

Once the size of the stud has been selected, the shape of the head and the material must be chosen.
For special heads see résumé pages E-5+6. To determine the length of the stud see page E-4.

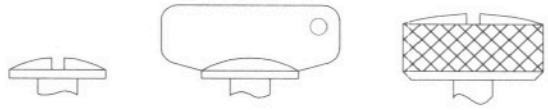

Dome Head "D" | Wing Head "W" | Knurled Head "K"

3. Securing the Stud

You have to choose the best method of securing the stud at the loose part. Usually the Washer, at temperatures which exceed 90° C the conical wire spring or the circlip is recommended.For further information see résumé of fixing devices (Page E-12).

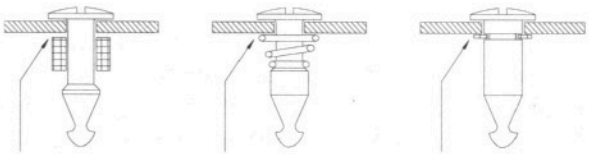

Washer "R" | Conical wire spring "KF" | Circlip "SR"

EUROPA FASTENERS GmbH
Otto-Hahn Straße 10 · D-71083 Herrenberg
Phone: +49 7032 93 84 0 · Fax: +49 7032 93 84 41
info@eufa.de · www.europa-fasteners.com

4. Fixing-mode of the Spring Clip

The Clip, which is usually the least expensive item depends upon customer preference.
There is the choice between rivets, spot welding, screws, clip-ins, slide- and angle-clips.
For further information see résumé of spring clips pages E-8+9.

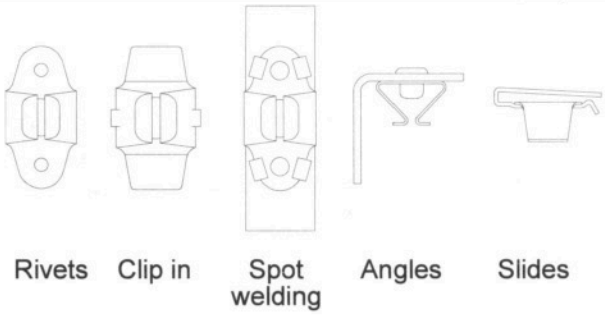

To ease a conversion to the **BI-FIX** quarter-turn system, we offer spring-clips whose hole patterns correspond to those of other producers.For further information see résumé of spring clips pages E-8+9.

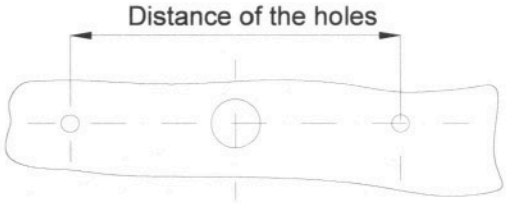

Choice of the Stud

There are different lenghts available for each series. The different lenghts are graduated as follows:

Size	Length in [mm]	Remark
"08"	0.5 - 1.0	The lengths of the Studs are constructed in a superposing-way, so that a continuous use of the "H"-dimension is possible.
"11"	1.0 - 2.0	
"16"	1.0 - 2.0	

The right choice of the shape of the head, the shank as well as the material and the character of surface are specified in the actual résumés of types or see pages 08-1, 08-2, 08-3 and 08-4. In the following examples, the indications a, b, c, d, e and f are mentioned at the description of the actual components.

Determination of the "H"-dimension

To determine the right length of the stud, the "H"-dimension has to be chosen according to the following examples:

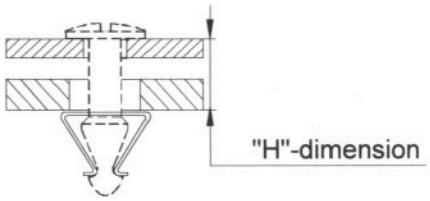

Standard-use

The "H"-dimension results as the sum of:

☞ H = a + b + c

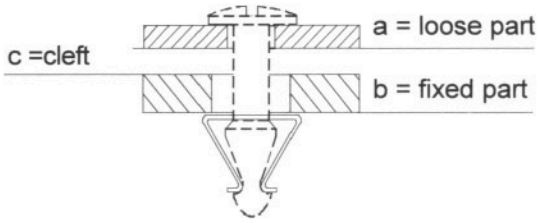

EUROPA FASTENERS GmbH
Otto-Hahn Straße 10 · D-71083 Herrenberg
Phone: +49 7032 93 84 0 · Fax: +49 7032 93 84 41
info@eufa.de · www.europa-fasteners.com

Use of other components

If other structural members are used, like the plain washer RW, the tolerance compensator TA, the conical wire spring KF, the spot-welding-clip CP or spring-clips which are pre-assembled, the thickness of the actual structural member (d or e) has to be taken into consideration.

☞ H = a + b + c + d + e

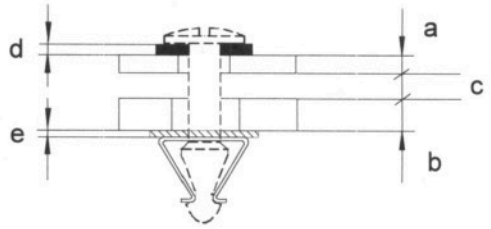

Use of pre-assembled angles

If bend off front-panels and pre-assembled spring-clips are in use (a=loose part), the "H"-dimension results as the sum of:

☞ H = a + b + c + e

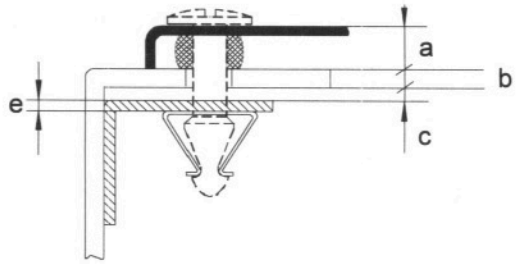

"Clip in Clip"

If Clip-in Clips (CC) are used, the thickness f has only to be taken into consideration, if the thickness c is smaller than the thickness f. The "H"-dimension results as the sum of

☞ Dimension H = if c > f → a + b + c
if c < f → see résumé of spring clips "Clip in Clip"

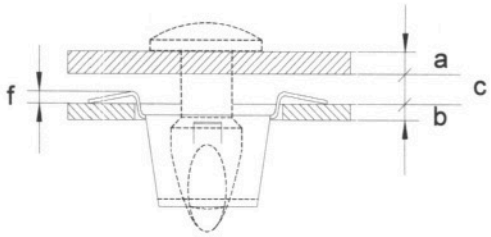

Dimension of the identity "I"

To guarantee the safe identification of the different **BI-FIX** quarter-turn Studs, the dimension of the identity "I", which is the distance between the bottom side of the head and the locking notch, is given.

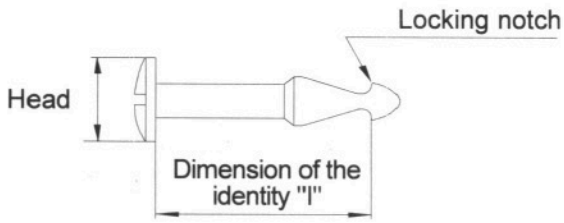

EUROPA FASTENERS GmbH
Otto-Hahn Straße 10 · D-71083 Herrenberg
Phone: +49 7032 93 84 0 · Fax: +49 7032 93 84 41
info@eufa.de · www.europa-fasteners.com

Résumé - bolt heads

Standard-Dome Head

Stock designation:
D ... + DR ...

Countersunk Head

Stock designation:
F ...

Wing Head

Stock designation:
W ...

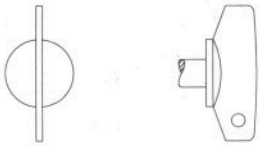

Cross recessed Head

Stock designation:
IS ...

Standard-Knurled Head

Bestell Bezeichnung:
K ...

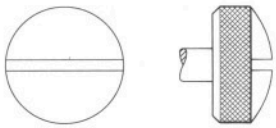

Special Knurled Head

Stock designation:
KS ...

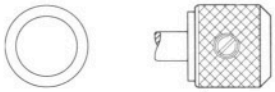

Hexagon socket Head

Bestell Bezeichnung:
IR ...

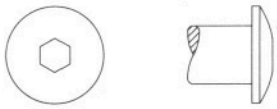

Hinged-bow Head

Stock designation:
B ...

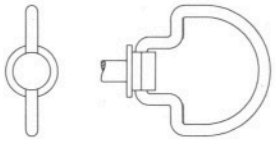

Wing Head, high

Bestell Bezeichnung:
WR ...

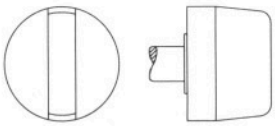

Special Hinged-bow Head

Stock designation:
BS ...

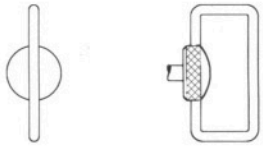

Wing head, flat

Bestell Bezeichnung:
LR ...

Special Wing Head

Stock designation:
WS ...

Two hole Headfor special stud-driver

Bestell Bezeichnung:
DL ...

External square Head

Stock designation:
SV ...

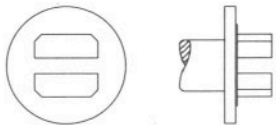

Hook wrench Head

Bestell Bezeichnung:
DLS ...

Milled Wing Head

Stock designation:
WF ...

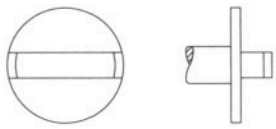

EUROPA FASTENERS GmbH
Otto-Hahn Straße 10 · D-71083 Herrenberg
Phone: +49 7032 93 84 0 · Fax: +49 7032 93 84 41
info@eufa.de · www.europa-fasteners.com

Threaded Head

Stock designation:

G ...(Tread design)

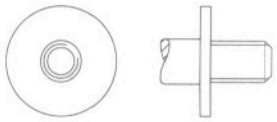

Lockable Head

Stock designation:

VS... (Schlüsselbez.)

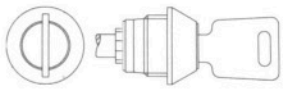

Resetable

Stock designation:

RG ...

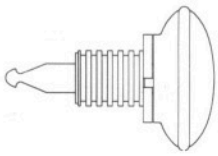

Resetable

Stock designation:

RK ...

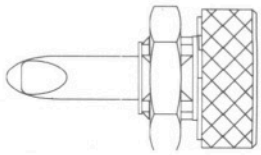

Resetable

Stock designation:

RS ...

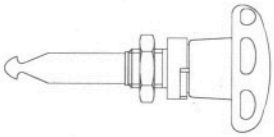

Resetable

Stock designation:

RR ...

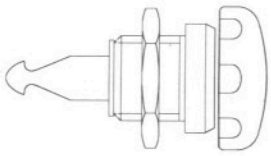

Resume - Shank shape

Standard-Shank shape

Stock designation:

D ...

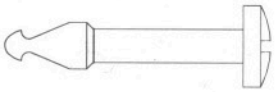

Cylindrical-Shank shape with bore

Stock designation:

DQL ...

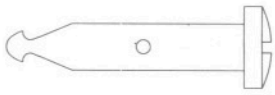

Cylindrical-Shank shape

Stock designation:

DQ ...

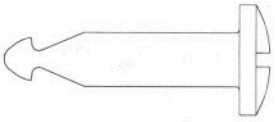

Cylindrical-Shank shapewith recess for circlip

Stock designation:

DQS ...

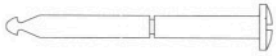

Cylindrical-Shank shapewith recess for washer

Stock designation:

DS ...

Standard-Shank shapefor pieces XR

Stock designation:

DR ...

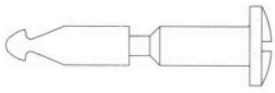

Catch without self centering

Stock designation:

D ... PT

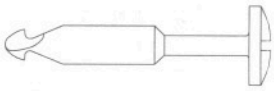

Pre-centeringwhen catching

Stock designation:

K ... ST

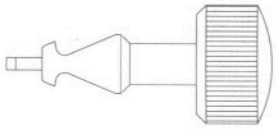

EUROPA FASTENERS GmbH
Otto-Hahn Straße 10 · D-71083 Herrenberg
Phone: +49 7032 93 84 0 · Fax: +49 7032 93 84 41
info@eufa.de · www.europa-fasteners.com

Stock designation of a Stud				
Example: **K** **1116** - **SZO**				
Headform	Size	Dimension	Material	Surface
D / W / **K**	"08" / "**11**" / "16"	"H" =**16**= a+b+c+d+e	**S**teel	**z**inc, **o**live

Characters for material- and surface- stock designation			
Material	Surface, Coulours	Abreviation	Example stock designation
brass	nickel-plated 7-8 µm	non-existant	D 0803
free cutting steel	xylan coated, black	SXL	D 0803 - XL
free cutting steel	zinc 12-14 mm, blue passivated	SZB	DR 0803
free cutting steel	zinc 12-14 mm, olive passivated	SZO	D 0803 - SZO
free cutting steel	zinc 12-14 mm, yellow passivated	SZG	D 0803 - SZG
free cutting steel	zinc 12-14 mm, black passivated	SZS	D 0803 - SZS
stainless steel	passivated	non-existant	D 0803 - IX
reinforced nylon	RAL Nr:.....	7038	DN 0803 - .....

Other materials and other finishes, as well as other headshapes, shank shapes or security devices on application.

EUROPA FASTENERS GmbH
Otto-Hahn Straße 10 · D-71083 Herrenberg
Phone: +49 7032 93 84 0 · Fax: +49 7032 93 84 41
info@eufa.de · www.europa-fasteners.com

Resume - Spring Clips

Rivets, screws

Stock designation:

C ...

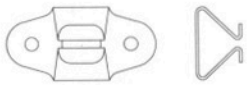

Clip with preparedwelding spotswithout panel

Stock designation:

C ... SB

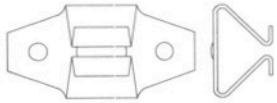

Clip, fixed by welding spotson zinc steel panel

Stock designation:

CP ...

Clip, fixed by welding spotson steel panel

Stock designation:

CPR ...

Pre-assembled Clipon angle

Stock designation:

MSC ...

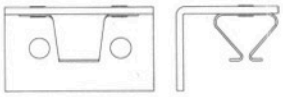

Flat Clip

Stock designation:

CU

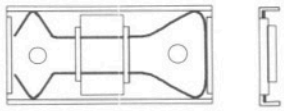

Clip-in

Stock designation:

CC ...

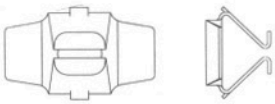

Clip-in for 19"-technique

Stock designation:

CX ...

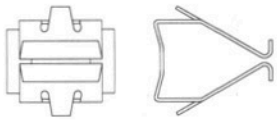

Clip-in, Toleranceclip

Stock designation:

CCT ...

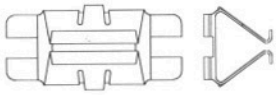

Slide in profile

Stock designation:

CF ...

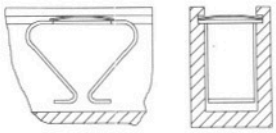

Slide

Stock designation:

CS ...

Slide

Stock designation:

CC ...

Toleranceclip

Stock designation:

CT ...

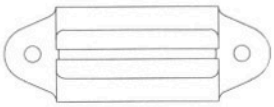

Different hole patternson applications

Stock designation:

C ... / X

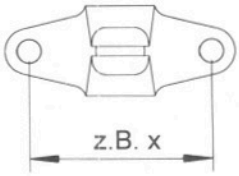

Insert

Stock designation:

CR ...

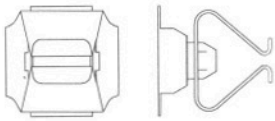

Profile Clip

Stock designation:

CG ...

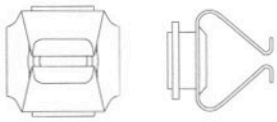

EUROPA FASTENERS GmbH
Otto-Hahn Straße 10 · D-71083 Herrenberg
Phone: +49 7032 93 84 0 · Fax: +49 7032 93 84 41
info@eufa.de · www.europa-fasteners.com

Stock designation of a spring-clip				
Example: **C 11 .. IX .**				
Type of Clip	Size	Clip / thickness of tin-plate	Material	Surface
MSC / **C** / CP usw.	"08" / "**11**" / "16"	1 / 2 / 3 usw. *1	Edelstahl (Inox)	passiviert

*1 only types CR, CC, CX, MSC, mentioned

Characters for material- and surface- stock designation			
Material	Surface, colour	Abreviation	Example stock designation
Steel	zinked 12-14 µm	non-existant	C 11
Steel	xylan (synthetic) coated	SXL	CC 16/1-XL
Steel	chemically nickel-plated min. 12 µm	SCN	CC 08- SCN
Stainless steel	passivated	IX	C 11- IX
Aluminum	blank	ALB	MSC 16-ALB

Other materials and other finishes, as well as other Clip-types, thicknesses of tin-plates and other models on application.

Fixing of the Clip-in Clips

Description Clip-in Clip

The "Clip-in Clip" method offers high savings on assembly-costs, as the clips catch in rectangular holes in a simple and precise way.

locate

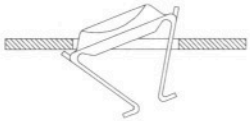

The Clip-in Clip is located in a oblique way. Then the Clip simply has to be pressed in with a simple tool or even with the thumb.

press in

The Clip-in Clip is fixed inside the hole. The different dimensions are perceptible in the following table of hole-patterns.

fixed

EUROPA FASTENERS GmbH
Otto-Hahn Straße 10 · D-71083 Herrenberg
Phone: +49 7032 93 84 0 · Fax: +49 7032 93 84 41
info@eufa.de · www.europa-fasteners.com

Table of hole-patterns

Size	J [mm]	K [mm]	Tool Nr.
"08"	8.7 ± 0.1	9.0 ± 0.1	WZ CCR08
"11"	13.0 ± 0.1	12.0 ± 0.1	WZ CCR11
"16"	20.0 ± 0.1	17.0 ± 0.1	WZ CCR16

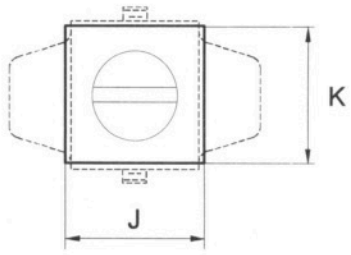

The "H"-dimension, when using Clip-in Clips

If Clip-in Clips are used, there is always a small space between the loose and the fix part (supporting-curve). This space "R" has to be taken into account, if the cleft c is smaller than the thickness f.

☞ Dimension H = a + R - b

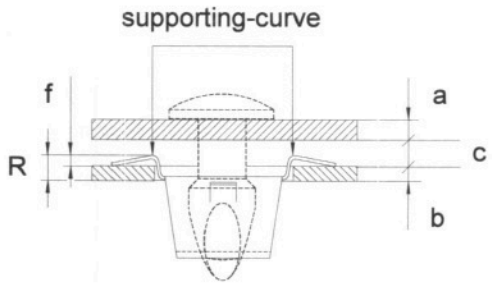

Size	Thickness of the fix part [mm]	Contstant R[mm]	Stock designation:	Size	Thickness of the fix part [mm]	Contstant R[mm]	Stock designation:
"08"	0.5 - 0.9	1.1	CCR 08-1-XL	"16"	0.9 - 1.6	2.2	CCR 16-1-XL
	0.9 - 1.2	1.6	CCR 08-2-XL		1.6 - 2.8	3.1	CCR 16-2-XL
	1.2 - 2.0	2.4	CCR 08-3-XL		2.8 - 4.0	4.6	CCR 16-3-XL
"11"	0.6 - 1.2	1.7	CCR 11-1-XL				
	1.2 - 2.0	2.4	CCR 11-2-XL				
	2.0 - 3.5	4.0	CCR 11-3-XL				

Application of the CX - Clip

The Spring Clip CX 11 was developed especially for the 19" - technique. As the Clip can be set in from the front, the fixed part,i. e. the shell, does not have to be dismounted.

A tolerance of the thickness b up to ± 0.1mm does not impair the performance of the Spring Clip.

☞ Klemmstärke H = wenn c > RX → a + b + c
wenn c < RX → nicht montierbar

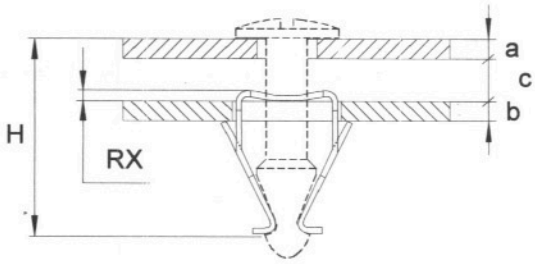

EUROPA FASTENERS GmbH
Otto-Hahn Straße 10 · D-71083 Herrenberg
Phone: +49 7032 93 84 0 · Fax: +49 7032 93 84 41
info@eufa.de · www.europa-fasteners.com

Thickness of tin-plate[mm]	Constant RX [mm]	Height HX [mm]	Stock designation
1.5 ± 0.1	1.0	13.0 ± 0.1	CX 11/15-IX
2.0 ± 0.1		13.0 ± 0.1	CX 11/20-IX
2.5 ± 0.1		13.0 ± 0.1	CX 11/25-IX

The profile to the right shows, that in case of continuous punching, each hole can be hard faced

Punching 9.1x9.1mm ±0.1mm

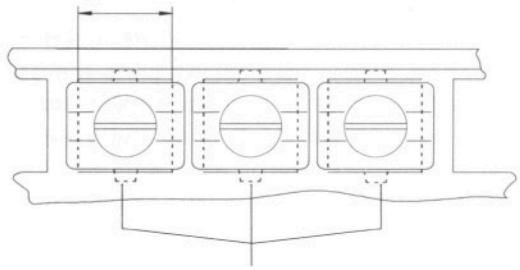

Each hole can be

Choice of the fixing devices

The Stud has to be fixed captive and as perpendicular as possible to the loose part. The washer R serves for that purpose. Besides, the function of the washer is to seal the hole of the fixed part and to avoid vibration between the parts. For each Size, there are different lenghts of washers available. They consist of EPDM and they can be used in a temperature range of -40°C bis +90°C. EPDM is exceptionally resistant against UV-rays, as well as against most of the industrial fats and oils. Also it can be used in the foodstuff industry. If other materials are used, they have to be specified after the stockdesignation.

Material	Shore hardness [°A]	Temperature range	Stock designation
EPDM	50 - 60	- 40 bis +90°C	non-existant
for Example: Silikon	45 - 60	- 45 bis +90°C	SIL

Determination of the thickness of the washer

To determine the thickness S of the washer, one adds the thickness of the fixed part b to those of the cleft c and adds 25% to the sum. Then the washer whose thickness is nearest to the calculated one, is chosen.

☞ Thickness of the washer S = (b + c) x 1.25

Pay attention to the fact that the entire cleft is filled with washers, so that the Stud is firmly and perpendiculary situated on the loose part. Also a tension between the loose and the fixed part is achieved, as well as vibration is avoided and the middle-hole in the fixed part is sealed.

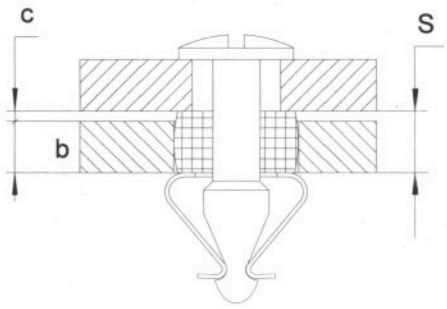

EUROPA FASTENERS GmbH
Otto-Hahn Straße 10 · D-71083 Herrenberg
Phone: +49 7032 93 84 0 · Fax: +49 7032 93 84 41
info@eufa.de · www.europa-fasteners.com

Fixing devices at temperatures exceeding 90°C

If BI-FIX quarter-turn fasteners are used at temperatures exceeding 90°C or if no isolating parts are desired, a conical wire spring KF made of special steel is used instead of the washer R made of EPDM. If short Studs are used, the conical wire spring might be interlocking with the Spring Clip. Therefore the installation of a additional security device for the shaft is recommended.

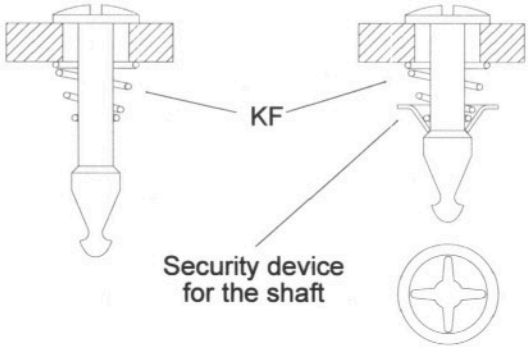

Also the Stud can be fixed to the loose part with a slip-on thrust-washer. In this case a matching puncture at the shank of the Stud is provided for.

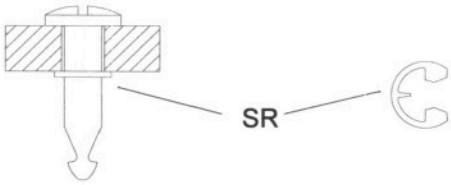

Stock designation of a washer			
Example: **R** **1708** - **M**			
Type of fixing device	Thickness of the washer	Size	Material
R	"H" = **1.7**mm in $^{1}/_{10}$ mm	"**08**" / "11" / "16"	entfällt bei Standard

Choice of accessories

The **BI-FIX** quarter-turn fastener system offers a succession of accessories. These parts should help you to solve other kinds of difficult fastening-problems.

The Tolerance Compensator TA / TAR

Variations of the "H"-dimension, caused by fabrication, coating etc. can be compensated for with the Tolerance Compensator TA/TAR. If the Tolerance compensator is used, its thickness d has to be added to the "H"-dimension:

☞ dimension H = a + b + c + d

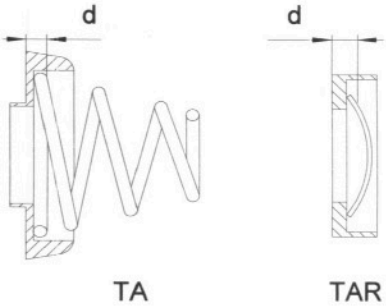

EUROPA FASTENERS GmbH
Otto-Hahn Straße 10 · D-71083 Herrenberg
Phone: +49 7032 93 84 0 · Fax: +49 7032 93 84 41
info@eufa.de · www.europa-fasteners.com

Seal-washers RW

To turn out a **BI-FIX** connection splash-proof, the fitting seal-washer has to be placed right under the head of the Stud.

Pay attention to the desired tension between the loose and the fixed part, reached by the fitting washers. The connection then is splash-proof to IP44. Then the max. closeness reaches about 10mm Wg.

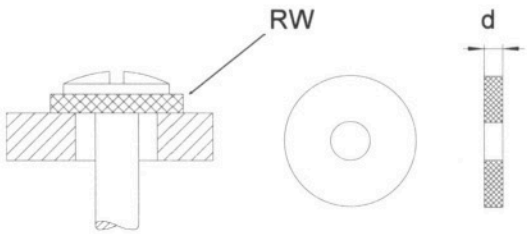

The Plain-washer RT

To protect coated surfaces of scratches caused by the head of the Stud, a plain-washer RT is placed under the latter. These washers with a thickness of 0.2mm also can be used to reach an exact adaptation to the "H"-dimension.

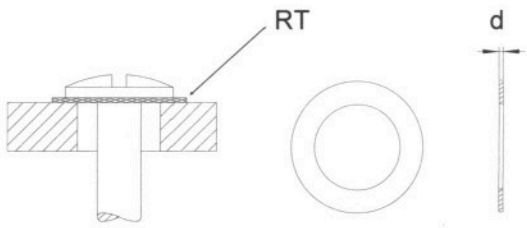

Advice, construction, latest developments

Advice is an important part of our work. As we partly produce ourself our products, we have the necessary competence to help you out of your problems of assembly. If you start a new project, we are here to give you expert advise, concerning quick acting closures. Please don't hesitate to contact us. We'll be happy to solve your problems with you.

EUROPA FASTENERS GmbH
Otto-Hahn Straße 10 · D-71083 Herrenberg
Phone: +49 7032 93 84 0 · Fax: +49 7032 93 84 41
info@eufa.de · www.europa-fasteners.com

BI-FIX Standard Parts "08"

Dome Head D		Wing Head W		Knurled Head K		Dimensions [mm]		
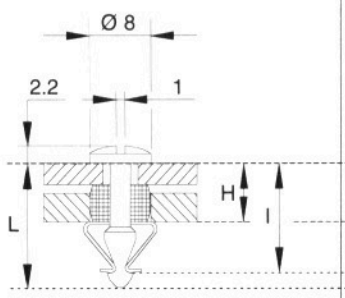 E ~1:1		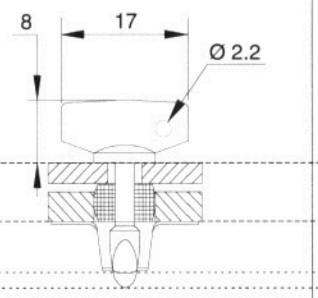 E ~1:1		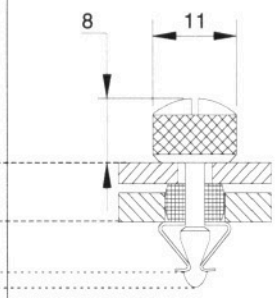 E ~1:1				
p/n	g/100pces	**p/n**	g/100pces	**p/n**	g/100pces	**"H"max**	L	**"I"**
D 0802	135	W 0802	215			3.0	11.2	9.3
D 0802.5	137	W 0802.5	218			3.5	11.7	9.7
D 0803	140	W 0803	220	K 0803	645	4.0	12.2	10.3
D 0803.5	142	W 0803.5	222			4.4	12.7	10.7
D 0804	145	W 0804	225	K 0804	650	4.8	13.0	11.1
D 0804.5	147	W 0804.5	226			5.1	13.4	11.5
D 0805	150	W 0805	230	K 0805	655	5.7	13.9	12.0
D 0806	155	W 0806	235	K 0806	660	6.8	15.0	13.1
D 0807	160	W 0807	240	K 0807	665	7.8	16.0	14.4
D 0808	165	W 0808	245	K 0808	670	9.0	17.2	15.3
D 0809	170	W 0809	250					
D 0810	175	W 0810	255					
D 0812	185	W 0812	260					
D 0832	190	W 0832	365					
Material:Brass*		Finish: Bright Nickel*		Weights are approximate				

* Other Dimensions, Materials, Finish on Request

EUROPA FASTENERS GmbH
Otto-Hahn Straße 10 · D-71083 Herrenberg
Phone: +49 7032 93 84 0 · Fax: +49 7032 93 84 41
info@eufa.de · www.europa-fasteners.com

Rivet on Clip C

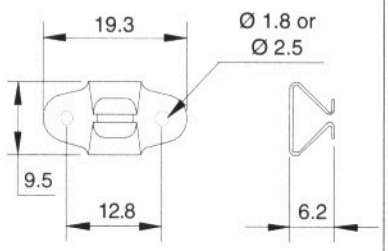

E ~1:1

p/n	Material	g/100pces
C 08/1.8	steel-Zn	65
C 08/2.5	steel-Zn	61

Rivet on Clip C

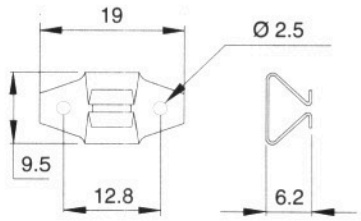

E ~1:1

p/n	Material	g/100pces
C 08-IX	stainless	60

Weld on Clip C

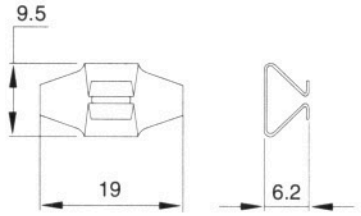

E ~1:1

p/n	Material	g/100pces
C 08-O-IX	stainless	60

Weld on Clip C

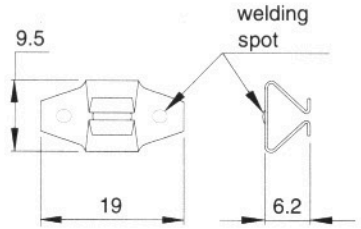

E ~1:1

p/n	Material	g/100pces
C 08-SB-IX	stainless	60

Rivet on Clip C

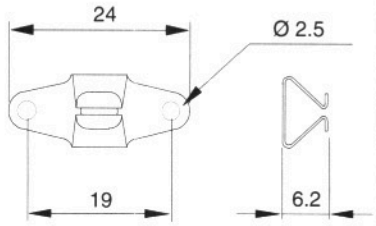

E ~1:1

p/n	Material	g/100pces
C 08/19	steel-Zn	68

Weld on Clip CP

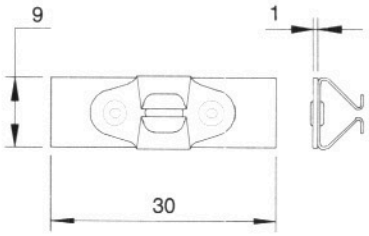

E ~1:1

p/n	Material	g/100pces
CP 08	steel-Zn	165

Weld on Clip CPR

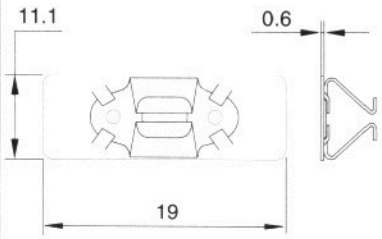

E ~1:1

p/n	Material	g/100pces
CPR 08	steel-Zn	170

Angle Bracket MSC

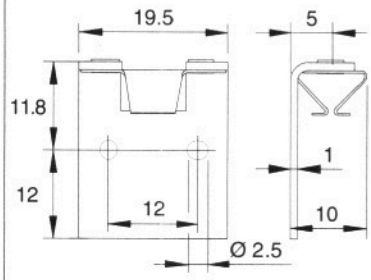

E ~1:1

p/n	Material	g/100pces
MSC 08/1	steel-Zn	410

Angle Bracket MSC

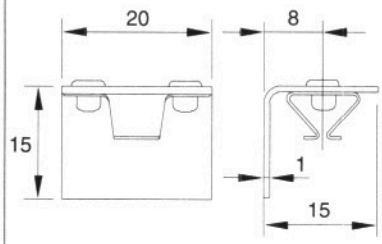

E ~1:1

p/n	Material	g/100pces
MSC 08/2	aluminum	220

*Other Dimensions, Materials or Finish on Request

EUROPA FASTENERS GmbH
Otto-Hahn Straße 10 · D-71083 Herrenberg
Phone: +49 7032 93 84 0 · Fax: +49 7032 93 84 41
info@eufa.de · www.europa-fasteners.com

Angle Bracket MSCR

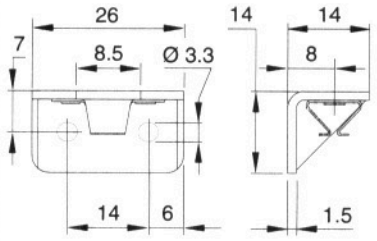

E ~ 1:1

p/n	Material	g/100pces
MSCR 08	steel-Zn	720

Slide on Clip CS

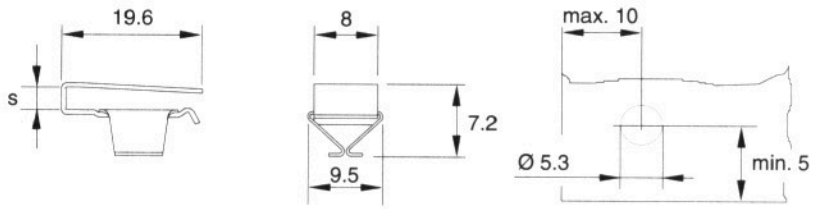

E ~1:1

p/n	s	Material	g/100pces	Panel Thickness Range s
CS 08/1.4	1.4	steel	165	s → 0.5 - 1.4mm
CS 08/3.0	3.0	steel	170	s → 1.5 - 3.0mm
CS 08/1.4-IX	1.4	stainl.	165	s → 0.5 - 1.4mm
CS 08/3.0-IX	3.0	stainl.	170	s → 1.5 - 3.0mm

Slide on Clip CC

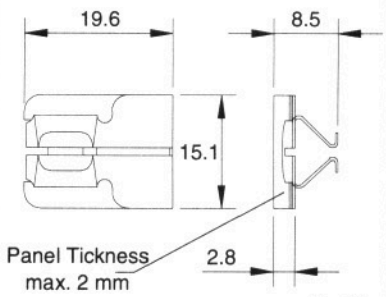

E ~1:1

p/n	Material	g/100pces
CC 08	steel-Zn	

Profile Clip CS

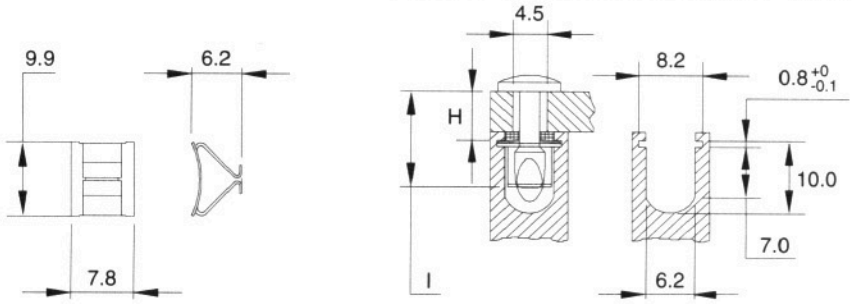

E ~1:1

p/n	Material	g/100pces	Aluminum Profile
CS 08	steel		Supplier on Request

Profile Clip CF

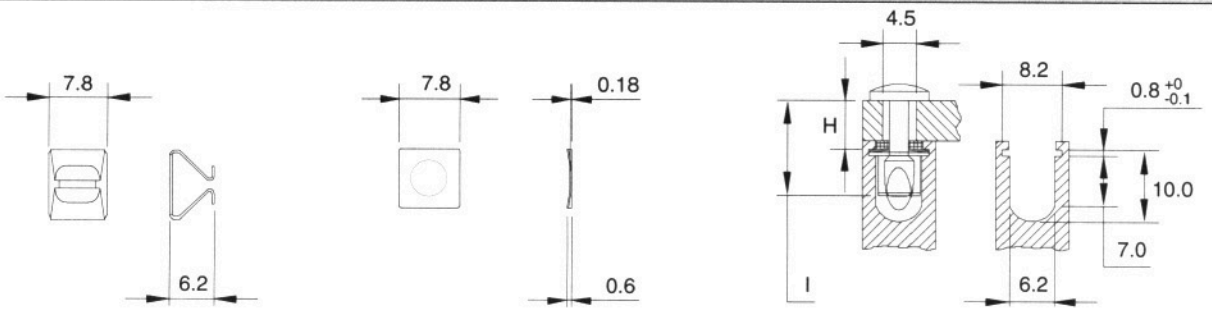

E ~1:1

p/n	Material	g/100pces	p/n	Material	g/100pces	Aluminum Profile
CF 08	steel-Zn	40	BS 08	steel-Zn	8	Supplier on Request
CF 08-IX	stainless	40	BS 08-IX	stainless	8	

* Other Dimensions, Materials, Finish on Request

EUROPA FASTENERS GmbH
Otto-Hahn Straße 10 · D-71083 Herrenberg
Phone: +49 7032 93 84 0 · Fax: +49 7032 93 84 41
info@eufa.de · www.europa-fasteners.com

Clip-in-Clip CR 08 two-piece (use Neoprene Washer RC and Distance Washer RC)

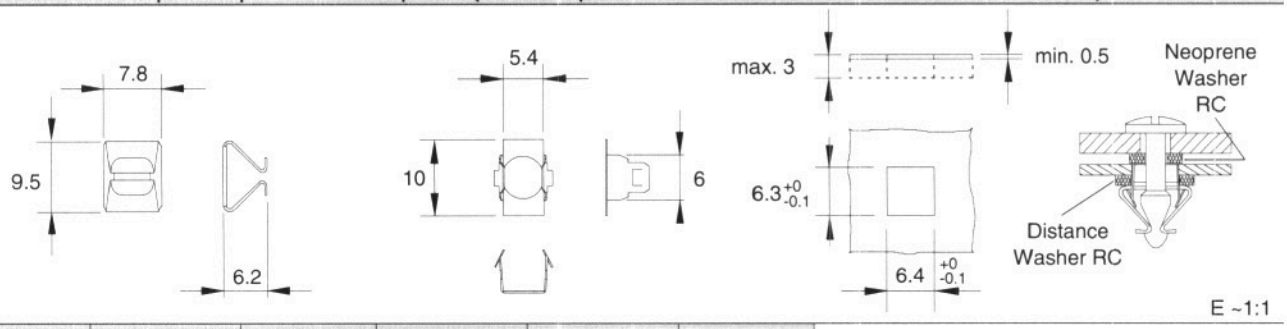

p/n	Material	g/100pces	p/n	Material	g/100pces
CR 08 C	zinc plated steel	40	CR 08 H	zinc plated steel	13
CR 08 C	stainless	40	CR 08 H	stainless	13

When using part number CR 08 panel thickness is a constant (3.0 mm = sheet thickness + distance washer). The hole has to be punched as per above drawing.

Clip - in -Clip CC

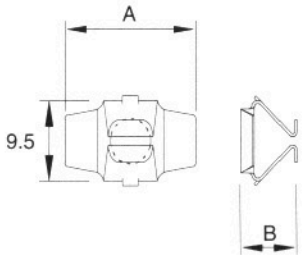

Same hole for all three panel thicknesses

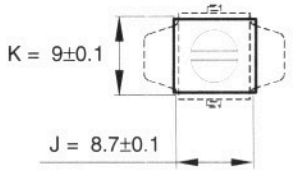

Hand insertion tool available
WZ CC 08

E ~1:1

p/n	Material	g/100pces	Panel Thickness Range	A	B
CC 08-1	XL	58	0.5 - 0.89	18.9	6.7
CC 08-2	XL	58	0.9 - 1.19	17.5	7.2
CC 08-3	XL	58	1.2 - 2.00	16.9	8.0

*Other Dimensions, Materials or Finish on Request

EUROPA FASTENERS GmbH
Otto-Hahn Straße 10 · D-71083 Herrenberg
Phone: +49 7032 93 84 0 · Fax: +49 7032 93 84 41
info@eufa.de · www.europa-fasteners.com

Neoprene Washer R

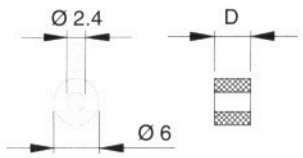

E ~1:1

p/n	D	g/100pces
R 0508	0.5	1.5
R 1208	1.2	3.0
R 1708	1.7	5.0
R 2508	2.5	7.0
R 3208	3.2	8.0
R 4808	4.8	15

Material: Neoprene

Sealing Washer RW

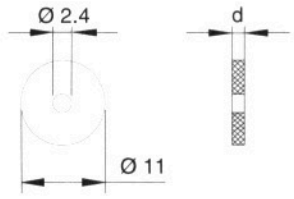

E ~1:1

p/n	d	g/100pces
RW 1508	1.5	17

Material: Neoprene

Washer for Finish Protection RT

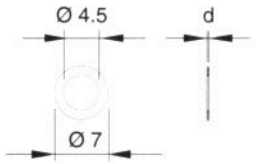

E ~1:1

p/n	d	g/100pces
RT 0208	0.2	0.5

Material: Nylon

Washer RC (Clip CR)

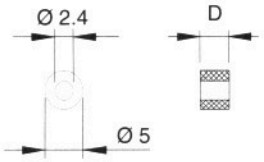

E ~1:1

p/n	D	g/100pces
RC 4008	3.8	7

Material: Neoprene

Distance Washer RC (Clip CR)

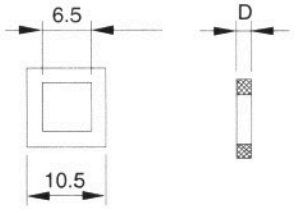

E ~1:1

p/n	D	g/100pces
RC 0508	0.5	6
RC 1008	1.0	9
RC 1508	1.5	14
RC 2008	2.0	17

Material: Neoprene

Circlip SR

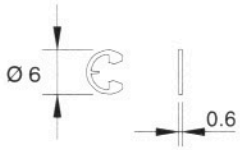

E ~1:1

p/n	D	g/100pces
SR 08	0.6	7

Material: Steel, Zinc & Passivate

Retaining Spring KF

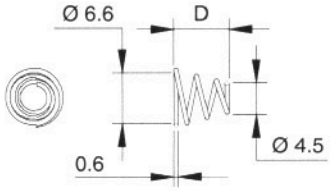

E ~1:1

p/n	D	g/100pces
KF 08	5.5	10

Material: Stainless

For Larger Tolerances TA

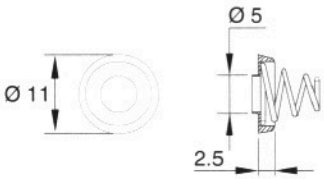

E ~1:1

p/n	d	g/100pces
TA 08	1.5	95

Material: Stainless & Brass

For Small Tolerances TAR

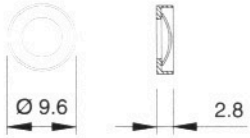

E ~1:1

p/n	d	g/100pces
TAR 08	1.5	25

Material:Stainless & Nylon Black

* Other Dimensions, Materials, Finish on Request

Dimensions in mm Tolerances when not stated according to DIN 7168 m	Drw: M4, RH	Chkd: KS	**EUROPA FASTENERS GmbH** Otto-Hahn Straße 10 · D-71083 Herrenberg Phone: +49 7032 93 84 0 · Fax: +49 7032 93 84 41 info@eufa.de · www.europa-fasteners.com
	Rev:	All Rights reserved	

BI-FIX - Standard Parts "11"

Dome Head D		Wing Head W		Knurled Head K		Dimensions [mm]		
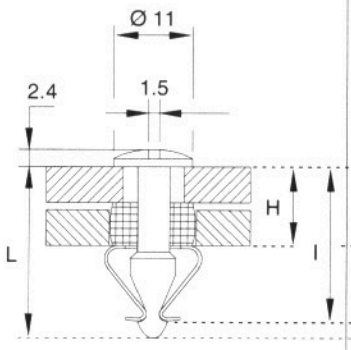 E ~1:1		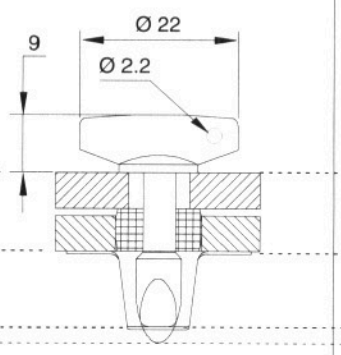 E ~1:1		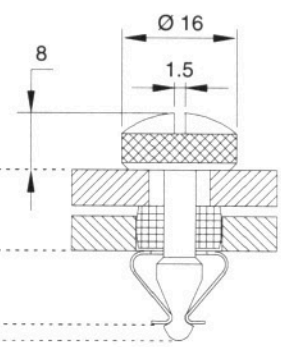 E ~1:1				
p/n	g/100pces	**p/n**	g/100pces	**p/n**	g/100pces	**"H"max**	L	**"I"**
D 1103	405	W 1103	575	K 1103	1350	3.7	16.6	14.4
D 1104	420	W 1104	585	K 1104	1360	4.7	17.6	15.4
D 1105	435	W 1105	600	K 1105	1370	5.7	18.6	16.4
D 1106	450	W 1106	615	K 1106	1380	6.9	19.8	17.6
D 1107	460	W 1107	625	K 1107	1395	7.7	20.6	18.4
D 1108	475	W 1108	640	K 1108	1410	8.9	21.8	19.6
D 1109	490	W 1109	650			9.7	22.6	20.4
D 1110	500	W 1110	665	K 1110	1435	10.7	23.6	21.4
D 1111	510	W 1111	680			11.7	24.6	22.4
D 1112	525	W 1112	690	K 1112	1460	12.9	25.8	23.6
D 1114	550	W 1114	715	K 1114	1490	14.7	27.6	25.4
D 1116	575	W 1116	740	K 1116	1515	16.7	29.6	27.4
D 1118	600	W 1118	770	K 1118	1540	18.7	31.6	29.4
D 1120	630	W 1120	795	K 1120	1565	20.9	33.8	31.6
D 1122	655	W 1122	820	K 1122	1590	22.7	35.6	33.4

Material: Brass* Finish: Bright Nickel* Weights are approximate

*Other Dimensions, Materials or Finish on Request

EUROPA FASTENERS GmbH
Otto-Hahn Straße 10 · D-71083 Herrenberg
Phone: +49 7032 93 84 0 · Fax: +49 7032 93 84 41
info@eufa.de · www.europa-fasteners.com

Rivet on Clip C

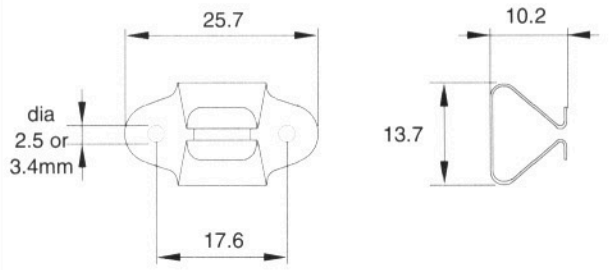

E ~1:1

p/n	Material	g/100pces
C 11	Zinc plated steel	135
C 11/3.4	Zinc plated steel	140

Rivet on Clip C

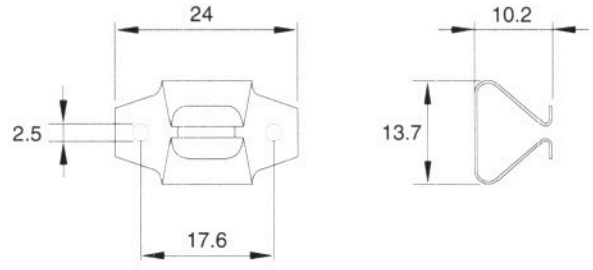

E ~1:1

p/n	Material	g/100pces
C 11-IX	Stainless Steel	140

Weld on Clip C

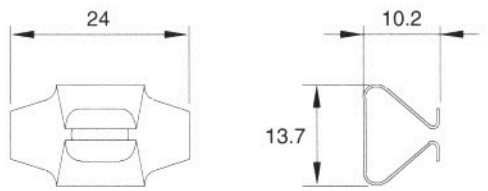

E ~1:1

p/n	Material	g/100pces
C 11-O-IX	Stainless Steel	145

Weld on Clip CP

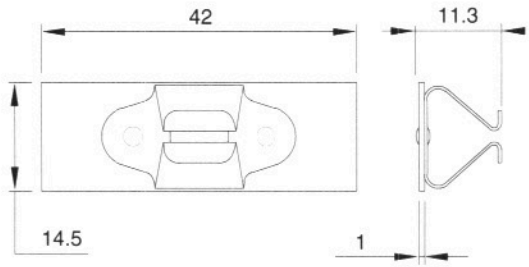

E ~1:1

p/n	Material	clip	g/100pces
CP 11-SZ	Steel-Zn	C 11	420

Weld on Clip CPR

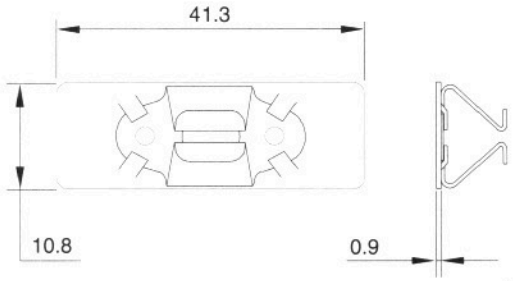

E~1:1

p/n	Material	Clip	g/100pces
CPR 11	Steel-Zn	C 11	430

Angle Bracket MSC

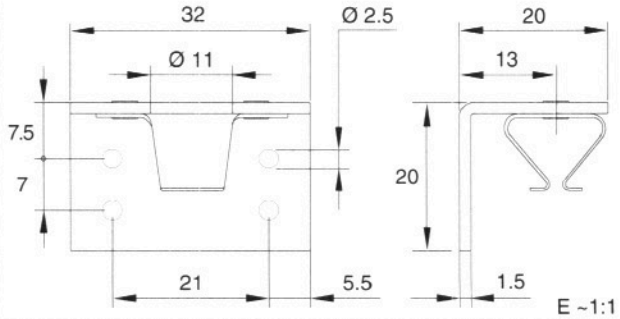

E ~1:1

p/n	Material	Clip	g/100pces
MSC 11/1	Steel-Zn	C 11	1400

*Other Dimensions, Materials or Finish on Request

EUROPA FASTENERS GmbH
Otto-Hahn Straße 10 · D-71083 Herrenberg
Phone: +49 7032 93 84 0 · Fax: +49 7032 93 84 41
info@eufa.de · www.europa-fasteners.com

Angle Bracket MSC

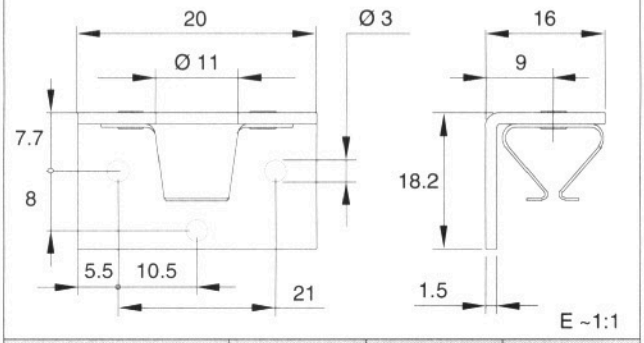

p/n	Material	Clip	g/100pces
MSC 11/2	Brass	C 11	1240

Angle Bracket MSC

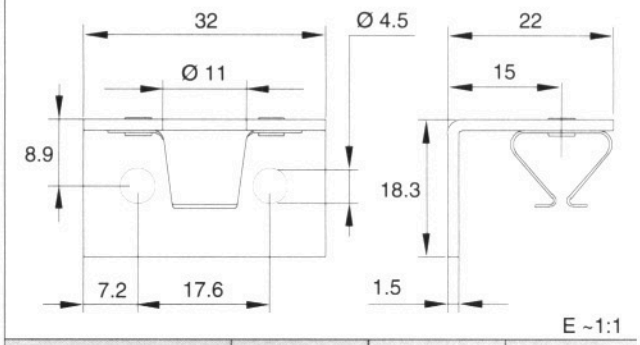

p/n	Material	Clip	g/100pces
MSC 11/3	Steel-Zn	C 11	1390

Angle Bracket MSC

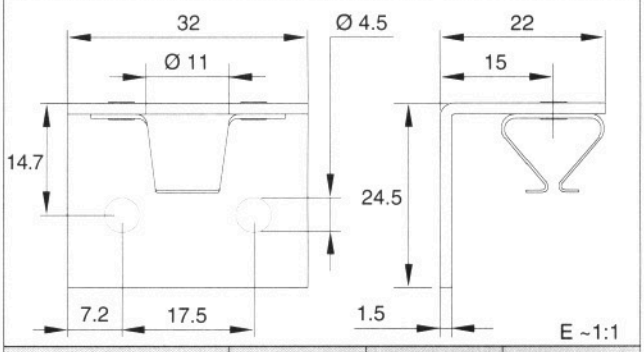

p/n	Material	Clip	g/100pces
MSC 11/4	Steel-Zn	C 11	1800

Angle Bracket MSC

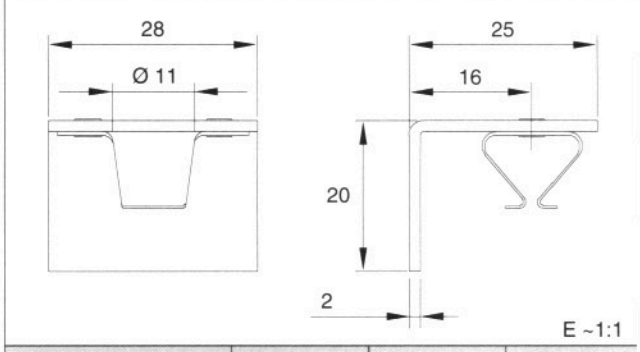

p/n	Material	Clip	g/100pces
MSC 11/5	Aluminum	C 11-IX	730

Angle Bracket MSC

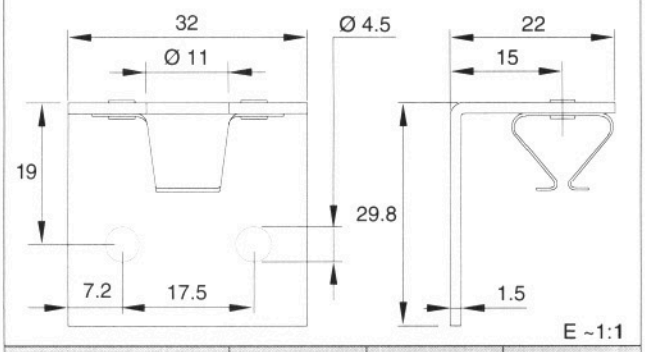

p/n	Material	Clip	g/100pces
MSC 11/6	Steel-Zn	C 11	1800

Angle Bracket MSCR

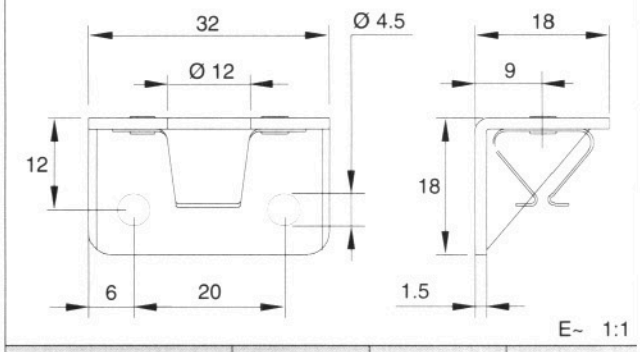

p/n	Material	Clip	g/100pces
MSCR 11	Steel-Zn	C 11	1210

*Other Dimensions, Materials or Finish on Request

All Dimensions in mm Tolerances when not stated according to DIN 7168 m	Drw: M4, RH	Chkd: KS	**EUROPA FASTENERS GmbH** Otto-Hahn Straße 10 · D-71083 Herrenberg Phone: +49 7032 93 84 0 · Fax: +49 7032 93 84 41 info@eufa.de · www.europa-fasteners.com
	Rev:	All Rights Reserved	

Rivet on Tolerance Clip CT

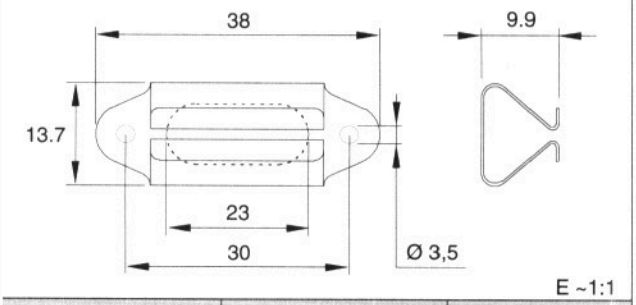

p/n	Material	g/100pces
CT 11	Steel-Dacromet	260

Clip-in-Clip Tolerance Clip CCT

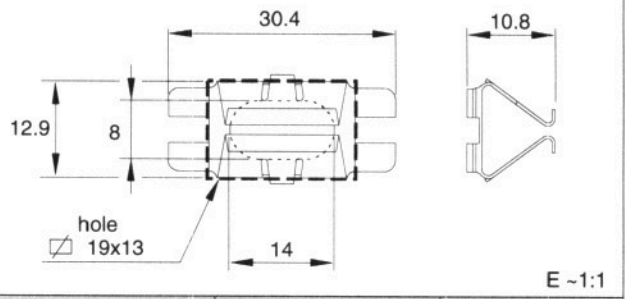

p/n	Material	g/100pces
CCT 11	Stainless Steel	180

Clip-in-Clip CC

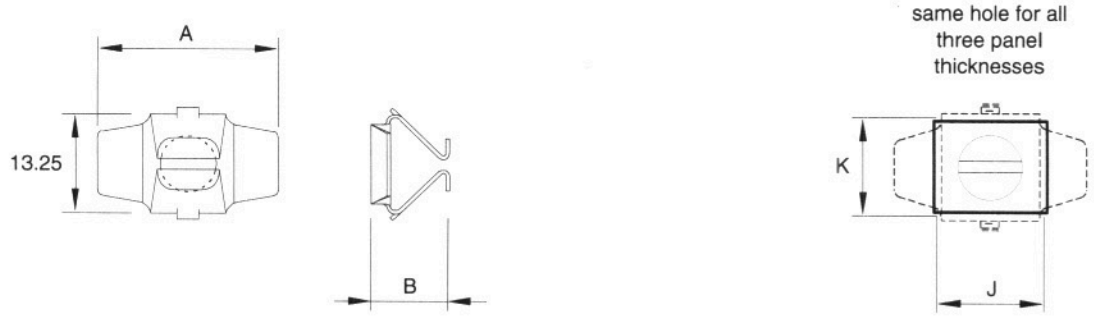

p/n	Material	g/100pces	Panel Thickness Range	A	B	K	J
CC 11-1	Steel-Xylan	150	0.6 - 1.19	22.3	11.6	12±0.1	13±0.1
CC 11-2	Steel-Xylan	150	1.2 - 1.99	20.9			
CC 11-3	Steel-Xylan	150	2.0 - 3.50	19.3	12.1	13.5±0.1	13.5±0.1

Clip-in-Clip for Electrical Racks CCX

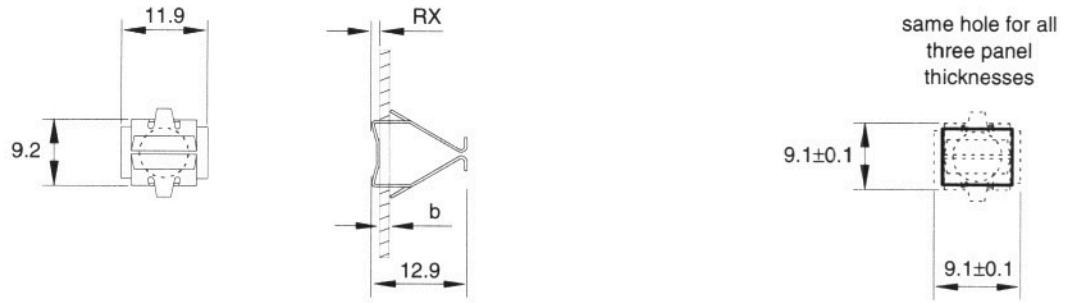

p/n	Material	g/100pces	Panel Thickness Range
CCX 11-15	Stainless Steel	85	1.4 - 1.59
CCX 11-20	Stainless Steel	85	2.0 - 2.19
CCX 11-25	Stainless Steel	85	2.5 - 2.69

*Other Dimensions, Materials or Finish on Request

EUROPA FASTENERS GmbH
Otto-Hahn Straße 10 · D-71083 Herrenberg
Phone: +49 7032 93 84 0 · Fax: +49 7032 93 84 41
info@eufa.de · www.europa-fasteners.com

Profile Clip CF

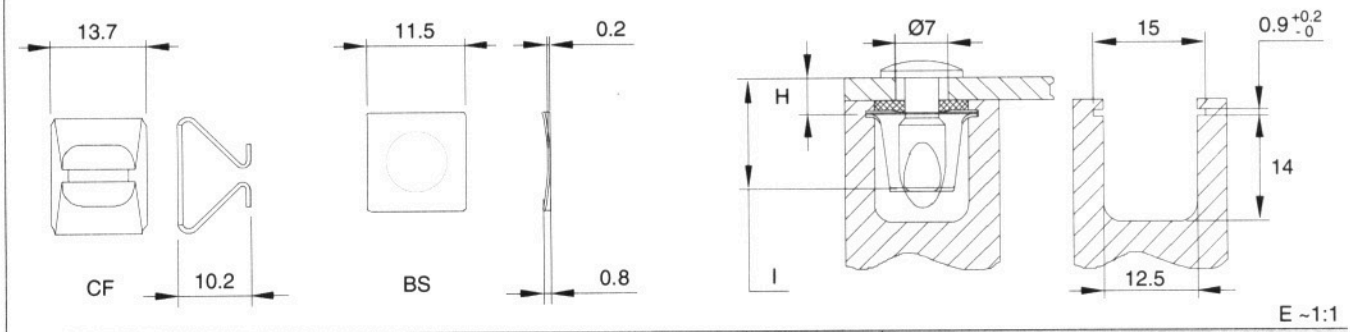

p/n	Material	g/100pces	p/n	Material	g/100pces	Aluminum Profile
CF 11	Steel-Zn	122	BS 11	Steel-Zn	19	Supplier on Request

Clip-in-Clip CR 11 two-piece (use Neoprene Washer RC and Distance Washer RC)

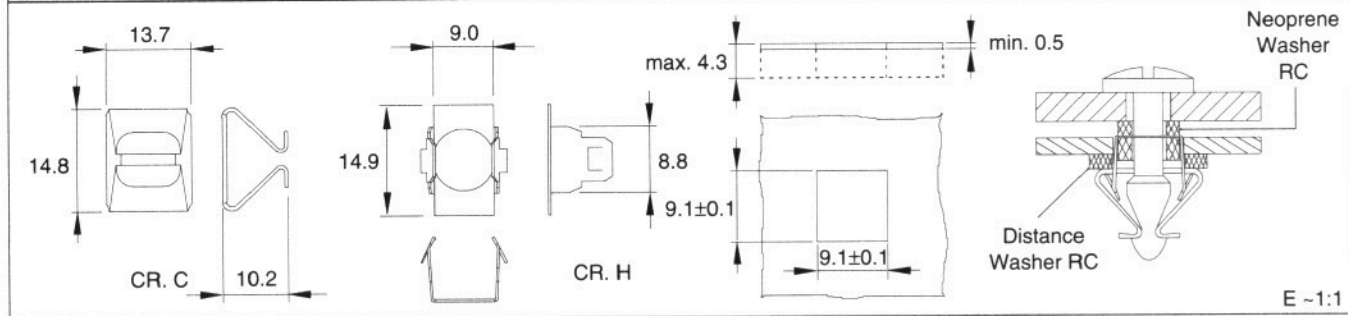

p/n	Material	g/100pces	p/n	Material	g/100pces	
CR 11 C	Steel-Zn	122	CR 11 H	Steel-Zn	38	When using part number CR11 panel thickness is a constant (4.3 mm = sheet thickness + distance washer). Hole to be punched as per above drawing.

*Other Dimensions, Materials or Finish on Request

EUROPA FASTENERS GmbH
Otto-Hahn Straße 10 · D-71083 Herrenberg
Phone: +49 7032 93 84 0 · Fax: +49 7032 93 84 41
info@eufa.de · www.europa-fasteners.com

Neoprene Washer R

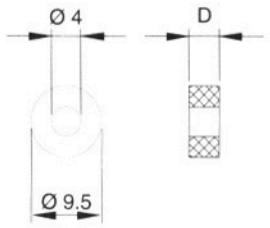

E ~1:1

p/n	D	g/100pces
R 1711	1.7	10
R 2511	2.5	18
R 4011	4.0	28
R 6011	6.0	45

Material: EPDM

Sealing Washer RW

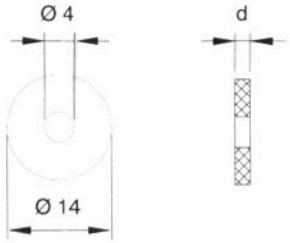

E ~1:1

p/n	d	g/100pces
RW 0511	0.5	13
RW 1011	1.0	19
RW 1511	1.5	25
RW 2011	2.0	31

Material: EPDM

Washer for Finish Protection RT

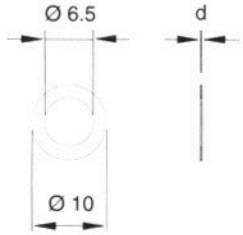

E ~1:1

p/n	d	g/100pces
RT 0211	0.2	1.5

Material: Nylon

Distance Washer RC (Clip CR)

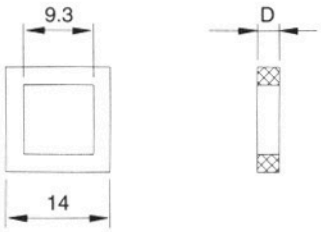

E ~1:1

p/n	D	g/100pces
RC 1011	1.0	17
RC 1511	1.5	22
RC 2011	2.0	27
RC 3011	3.0	38

Material: Neoprene

Neoprene Washer for Clip CR)

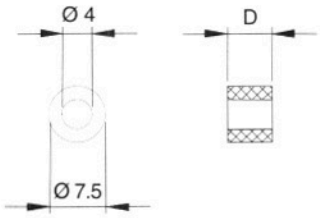

E ~1:1

p/n	D	g/100pces
RC 6011/3	3.0	12
RC 6011/6	6.0	24

Material: Neoprene

Retaining Spring KF

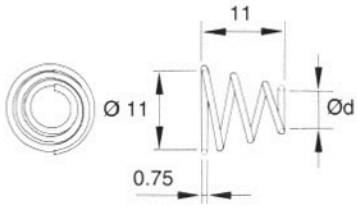

E ~1:1

p/n	d	g/100pces
KF 11/4.5	4.5	33
KF 11/6.5	6.5	33

Material: Stainless

For larger Tolerances TA

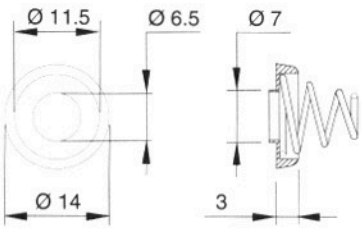

E ~1:1

p/n	d	g/100pces
TA 11	1.5	130

Material:Stainless, Brass-Nickel

For small Tolerances TAR 1

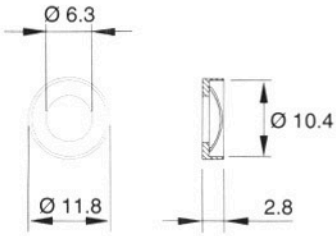

E ~1:1

p/n	d	g/100pces
TAR 11-1	1.5	40

Cup washer for studs **DR 11..**

Material:Stainless, Nylon

For small Tolerances TAR 2

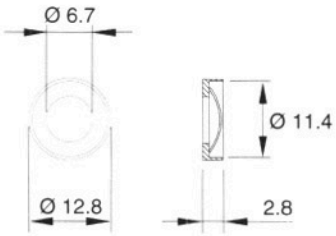

E ~1:1

p/n	d	g/100pces
TAR 11-2	1.5	40

Cup washer for studs **D 11..**

Material: Stainless, Nylon

*Other Dimensions, Materials or Finish on Request

EUROPA FASTENERS GmbH
Otto-Hahn Straße 10 · D-71083 Herrenberg
Phone: +49 7032 93 84 0 · Fax: +49 7032 93 84 41
info@eufa.de · www.europa-fasteners.com

Circlip SR

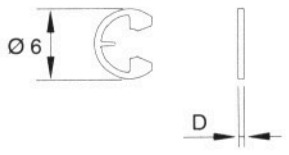

E ~1:1

p/n	D	g/100pces
SR 11	0.6	16

Material: Steel, Zinc Passivated

*Other Dimensions, Materials or Finish on Request

All Dimensions in mm Tolerances when not stated according to DIN 7168 m	Drw: M4, RH	Chkd: KS	**EUROPA FASTENERS GmbH** Otto-Hahn Straße 10 · D-71083 Herrenberg Phone: +49 7032 93 84 0 · Fax: +49 7032 93 84 41 info@eufa.de · www.europa-fasteners.com
	Rev:	All Rights Reserved	

BI-FIX - Standard Parts "16"

Dome Head D		Wing Head W		Knurled Head K		Dimensions [mm]		
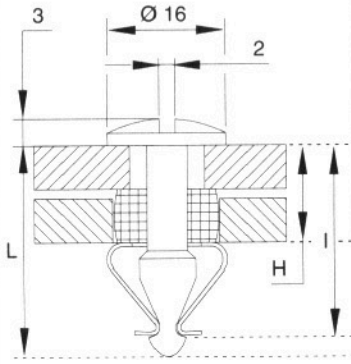 E ~1:1		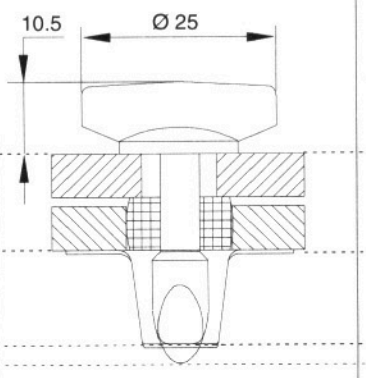 E ~1:1		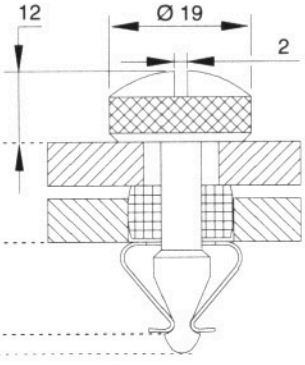 E ~1:1				
p/n	g/100pces	**p/n**	g/100pces	**p/n**	g/100pces	**"H"max**	L	**"I"**
D 1604	1085	W 1604	1440			5.0	22.2	18.4
D 1606	1145	W 1606	1795	K 1606	3255	7.0	24.2	20.4
D 1608	1205	W 1608	2150	K 1608	3345	9.0	26.2	22.4
D 1610	1265	W 1610	2505	K 1610	3435	11.0	28.1	24.3
D 1612	1325	W 1612	2860	K 1612	3525	13.0	30.1	26.3
D 1614	1385	W 1614	3215	K 1614	3615	15.2	32.4	28.6
D 1616	1445	W 1616	3570	K 1616	3705	17.0	34.1	30.3
D 1618	1505	W 1618	3925	K 1618	3795	18.8	36.0	32.2
D 1620	1565	W 1620	4280	K 1620	3885	21.0	38.1	34.3
Material: Brass*		Finish: Bright Nickel*		Weights are approximate				

*Other Dimensions, Materials or Finish on Request

EUROPA FASTENERS GmbH
Otto-Hahn Straße 10 · D-71083 Herrenberg
Phone: +49 7032 93 84 0 · Fax: +49 7032 93 84 41
info@eufa.de · www.europa-fasteners.com

BI-FIX - Variant

Dimensions [mm]

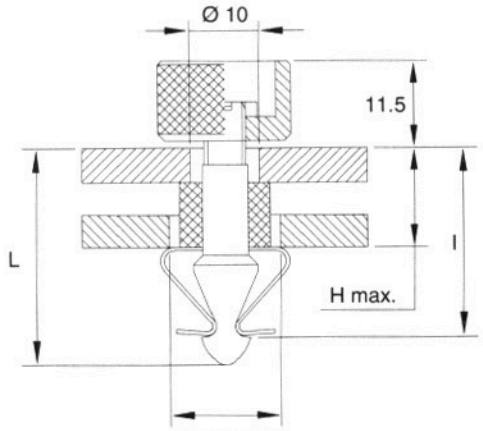

open position

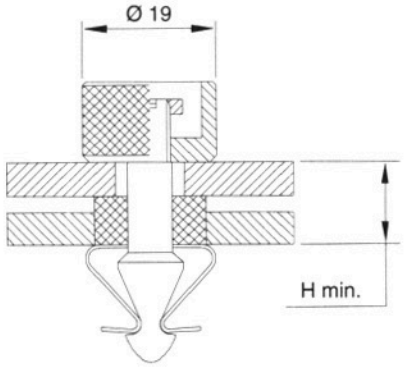

close position

E ~1:1

p/n	g/100pces	"H" (min. - max. Grip Lenght "H")	L (Overall Lenght "L" excluding head)	"I" (From head to locking point in receptacle)
KV 1606	2290	4-6	24.2	20.4
KV 1608	2340	6-8	26.2	22.4
KV 1610	2390	8-10	28.2	24.4
KV 1612	2450	10-12	30.2	26.4
KV 1614	2500	12-14	32.2	28.4
KV 1616	2550	14-16	34.2	30.4
KV 1618	2600	16-18	36.2	32.4
KV 1620	2650	18-20	38.2	34.4
KV 1622	2710	20-22	40.2	36.4

Material:Brass* Finish:Bright Zinc* Weights are approximate

* Other Dimensions, Materials or Finish on Request

EUROPA FASTENERS GmbH
Otto-Hahn Straße 10 · D-71083 Herrenberg
Phone: +49 7032 93 84 0 · Fax: +49 7032 93 84 41
info@eufa.de · www.europa-fasteners.com

Rivet on Clip C

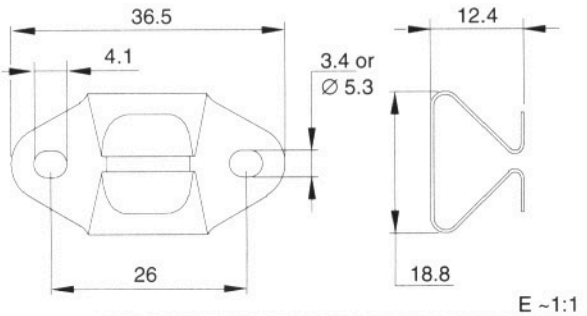

E ~1:1

p/n	Material	g/100pces
C 16	Steel-Zn plated	375
C 16/5.3	Steel-Zn plated	375

Rivet on Clip C

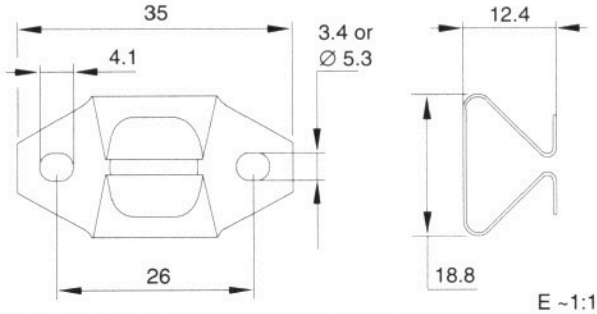

E ~1:1

p/n	Material	g/100pces
C 16-IX	Stainless Steel	370
C 16/5.3-IX	Stainless Steel	370

Weld on Clip C (no riveting hole)

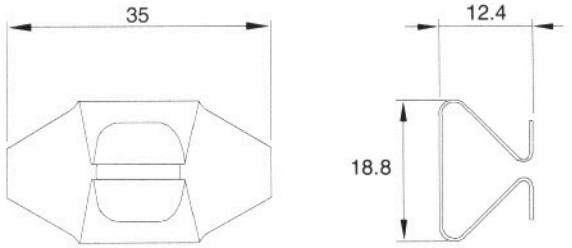

E ~1:1

p/n	Material	g/100pces
C 16-O-IX	Stainless Steel	375

Tolerance Rivet on Clip CT

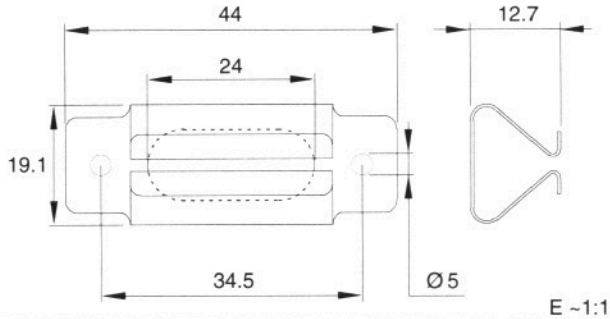

E ~1:1

p/n	Material	g/100pces
CT 16	Steel-Dacromet	580

Weld on Clip CP

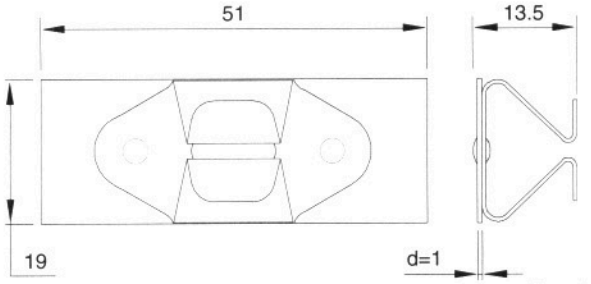

E ~1:1

p/n	Material	Clip	g/100pces
CP 16	Steel-Zn	C 16	800

Weld on Clip CPR

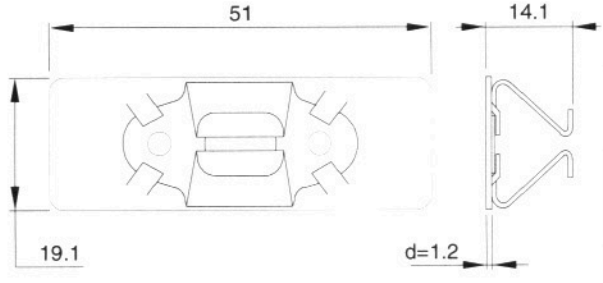

E ~1:1

p/n	Material	Clip	g/100pces
CPR 16	Steel-Zn	C 16	1200

*Other Dimensions, Materials or Finish on Request

Dimensions in mm Tolerances when not stated according to DIN 7168 m	Drw: M4, RH	Chkd: KS	**EUROPA FASTENERS GmbH** Otto-Hahn Straße 10 · D-71083 Herrenberg Phone: +49 7032 93 84 0 · Fax: +49 7032 93 84 41 info@eufa.de · www.europa-fasteners.com
	Rev:	All Rights Reserved	

Clip-in-Clip CC

E ~1:1

p/n	Material	g/100pces	Panel Thickn. Range	A	B
CC 16-1	Steel-Zn plated	410	0.9 - 1.59	33.8	14.4
CC 16-2	Steel-Zn plated	410	1.6 - 2.79	32.4	15.3
CC 16-3	Steel-Zn plated	410	2.8 - 4.00	29.1	16.8

Angle Bracket MSC

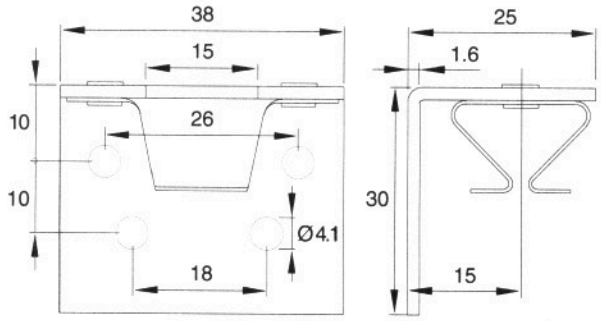

E ~1:1

p/n	Material	Clip	g/100pces
MSC 16/1	Steel-Zn	C 16	1350

Angle Bracket MSC

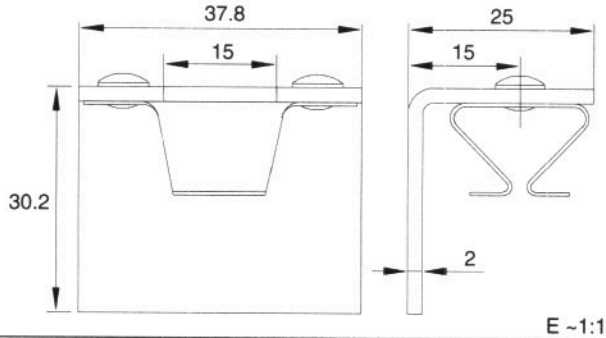

E ~1:1

p/n	Material	Clip	g/100pces
MSC 16/2	Aluminum	C 16	1200

Angle Bracket MSCR

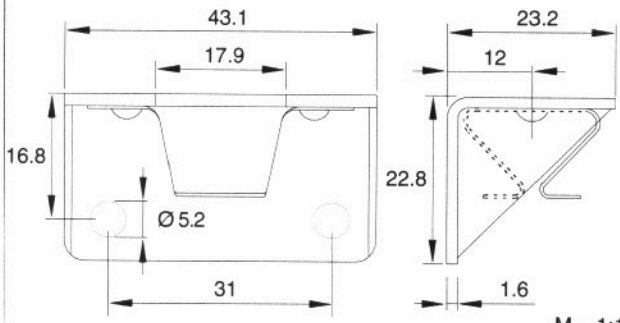

M ~ 1:1

p/n	Material	Clip	g/100pces
MSCR 16	Steel-Zn	C 16	2200

* Other Dimensions, Materials or Finish on Request

Dimensions in mm Tolerances when not stated according to DIN 7168 m	Drw: M4, RH	Chkd: KS	**EUROPA FASTENERS GmbH** Otto-Hahn Straße 10 · D-71083 Herrenberg Phone: +49 7032 93 84 0 · Fax: +49 7032 93 84 41 info@eufa.de · www.europa-fasteners.com
	Rev:	All Rights Reserved	

Neoprene Washer R

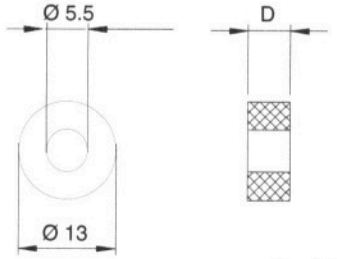

E ~1:1

p/n	D	g/100pces
R 1716	1.7	25
R 2516	2.5	35
R 4016	4.0	60
R 6016	6.0	90
R 8016	8.0	120

Material: EPDM

Sealing Washer RW

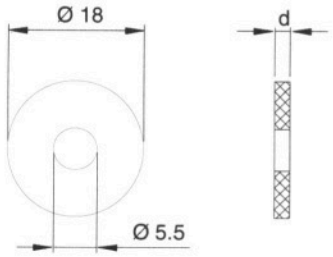

E ~1:1

p/n	d	g/100pces
RW 0516	0.5	50
RW 1016	1.0	65
RW 1516	1.5	90
RW 2016	2.0	105

Material: EPDM

Washer for Finish Protection RT

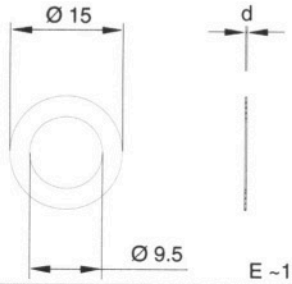

E ~1:1

p/n	d	g/100pces
RT 0216	0.2	2.5

Material: Nylon

Retaining Spring KF

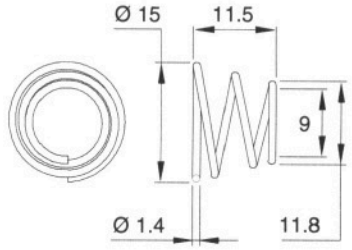

E ~1:1

p/n		g/100pces
KF 16		75

Material: Stainless

For Larger Tolerances TA

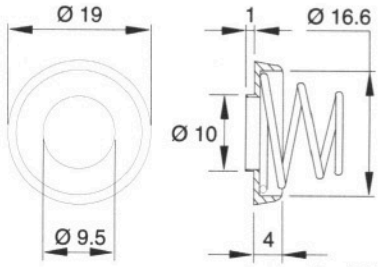

E ~1:1

p/n	d	g/100pces
TA 16	1.5	375

For Small Tolerances TAR

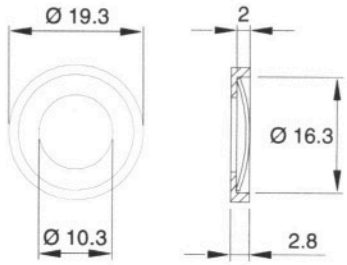

E ~1:1

p/n	d	g/100pces
TAR 16	1.5	85

Circlip SR

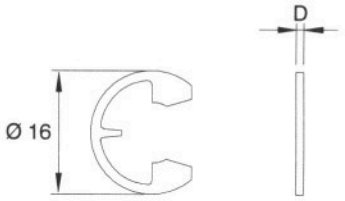

E ~1:1

p/n	D	g/100pces
SR 16	1.0	60

Material:Steel, Zinc Passivated

*Other Dimensions, Materials or Finish on Request

Dimensions in mm Tolerances when not stated according to DIN 7168 m	Drw: M4, RH	Chkd: KS	**EUROPA FASTENERS GmbH** Otto-Hahn Straße 10 · D-71083 Herrenberg Phone: +49 7032 93 84 0 · Fax: +49 7032 93 84 41 info@eufa.de · www.europa-fasteners.com
	Rev:	All Rights Reserved	

BI-FIX - Spherical Studs "KB"

Spherical studs are used when a panel has to be opened by pulling and closed by simple pushing.These studs use the same clips as standard BI-FIX quarter-turn studs.If required the spherical studs can be fixed the way that the fastening system is not seen from the outside.

Spherical Stud			
Exemple: **KB 08 A5V** - 001			
Type	Size	Fastening of Stud	Dash Number
Spherical Stud	"**08**" / "11" / "16" (correspondant clip)	**A** = External Thread / **5** = Thread Size (M5)	To distinguish between studs with same characteristics but f.e.different grip lenght, thread lenght, ...
		I = External Thread / 5 = Thread Size (M5)	
		S = Welding (stud welding)	
		V = Polygonal (hexagonal size)	
		E = injection moulding (insert into tooling)	

Designation for Materials and Finish			
Material	Surface, Colour	Abbreviation	Designation
Brass	Nickel 7-8 µm		see next chapters
Brass	Xylan, black	XL	"
Steel	Zinc 12-14 µm, Passivated blue	SZ	"
Steel	Zinc 12-14 µm, Passivated olive	SZO	"
Steel	Zinc 12-14 µm, Passivated yellow	SZG	"
Steel	Zinc 12-14 µm, Passivated black	SZS	"
Stainless Steel	Passivated	IX	"
Nylon	RAL Nr:.....	7038	"

Spherical Studs will be manufactured according to customer drawings. Customer is free to change dimensions, finish pull out strenght, method of fixation, etc.

* Other Dimensions, Materials, Finish on Request, *1 Pull Out Strenght with Clip C08, *3 Pull Out Strenght with Clip C16

EUROPA FASTENERS GmbH
Otto-Hahn Straße 10 · D-71083 Herrenberg
Phone: +49 7032 93 84 0 · Fax: +49 7032 93 84 41
info@eufa.de · www.europa-fasteners.com

europa fasteners

BI-FIX - Spherical Studs "KB"

(For Clip C 08 *1)

Spherical Stud "08"

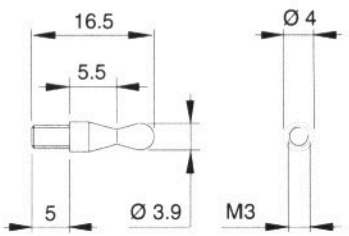

E ~1:1

type	g/100pces	Material
KB 08A3-001	105	Steel

Spherical Stud "08"

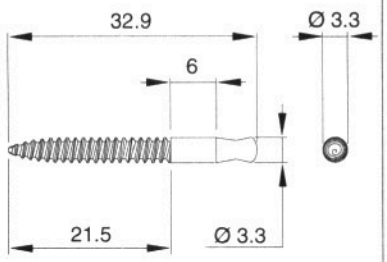

E ~1:1

type	g/100pces	Material
KB 08A3-002	165	Brass

Spherical Stud "08"

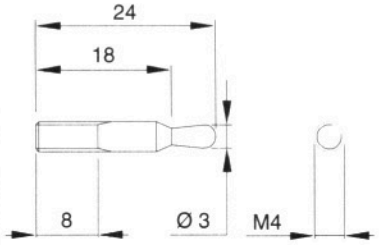

E ~1:1

type	g/100pces	Material
KB 08A4-001	190	Brass

Spherical Stud "08"

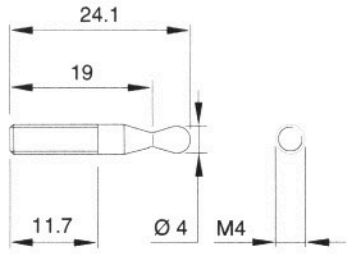

E ~1:1

type	g/100pces	Material
KB 08A4-002	185	Brass
Pull Out Strenght ~20 N *1		

Spherical Stud "08"

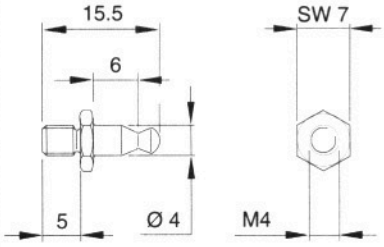

E ~1:1

type	g/100pces	Material
KB 08A4V-001	155	Brass
Pull Out Strenght ~75 N *1		

Spherical Stud "08"

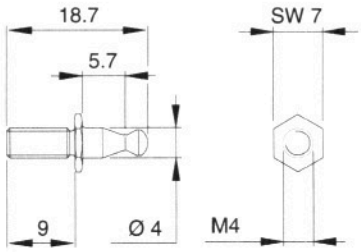

E ~1:1

type	g/100pces	Material
KB 08A4V-002	200	Brass
Pull Out Strenght ~75 N *1		

Spherical Stud "08"

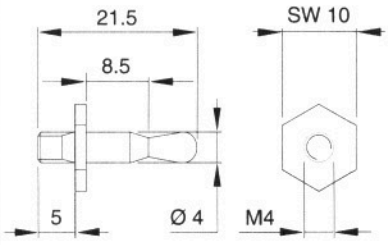

E ~1:1

type	g/100pces	Material
KB 08A4V-003	285	Brass
Pull Out Strenght ~25 N *1		

Spherical Stud "08"

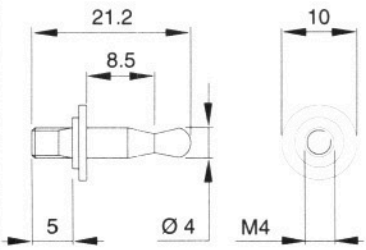

E ~1:1

type	g/100pces	Material
KB 08A4V-004	235	Brass
Pull Out Strenght ~28 N *1		

Spherical Stud "08"

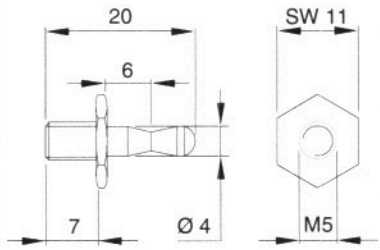

E ~1:1

type	g/100pces	Material
KB 08A5V-001	275	Brass
Pull Out Strenght ~35 N *1		

* Other Dimensions, Materials, Finish on Request, *1 Pull Out Strenght with Clip C 08, *3 Pull Out Strenght with Clip C 16

All Dimensions in mm Tolerances when not stated according to DIN 7168 m	Drwn: M4, RH	Chkd: KS	**EUROPA FASTENERS GmbH** Otto-Hahn Straße 10 · D-71083 Herrenberg Phone: +49 7032 93 84 0 · Fax: +49 7032 93 84 41 info@eufa.de · www.europa-fasteners.com
	Rev:	All Rights Reserved	

BI-FIX - Spherical Studs "KB"

(For Clip C08 *1)

Spherical Stud "08"

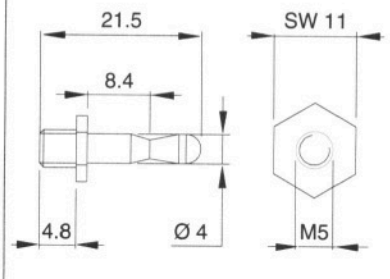

E ~1:1

type	g/100pces	Material
KB 08A5V-002	325	Brass
Pull Out Strenght ~25 N *1		

Spherical Stud "08"

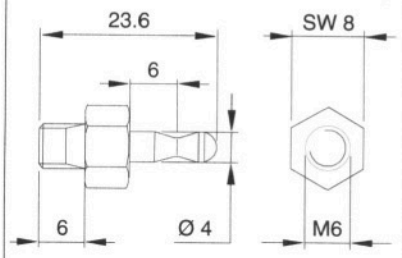

E ~1:1

type	g/100pces	Material
KB 08A6V-001	485	Brass

Spherical Stud "08"

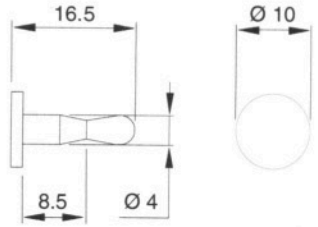

E ~1:1

type	g/100pces	Materia
KB 08S-001	195	Steel

Spherical Stud "08"

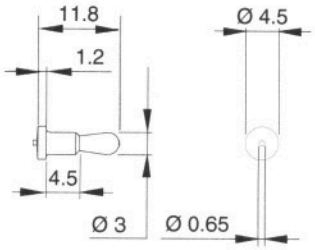

type	g/100pces	Material
KB 08S-002	60	Stainl.
Pull Out Strenght ~15 N *1		

* Other Dimensions, Materials, Finish on Request, *1 Pull Out Strenght with Clip C08, *3 Pull Out Strenght with Clip C16

All Dimensions in mm Tolerances when not stated according to DIN 7168 m	Drwn: M4, RH	Chkd: KS	**EUROPA FASTENERS GmbH** Otto-Hahn Straße 10 · D-71083 Herrenberg Phone: +49 7032 93 84 0 · Fax: +49 7032 93 84 41 info@eufa.de · www.europa-fasteners.com
	Rev:	All Rights Reserved	

BI-FIX - Spherical Studs "KB"

(For Clip C 16 *3)

Spherical Stud "16"

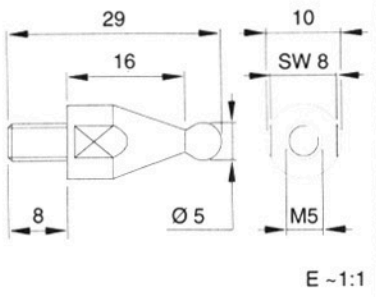

type	g/100pces	Material
KB 16A5V-001		Steel
Pull Out Strenght ~185 N *3		

Spherical Stud "16"

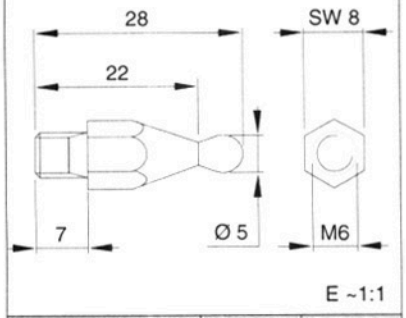

type	g/100pces	Material
KB 16A6V-001	635	SZG

Spherical Stud "16"

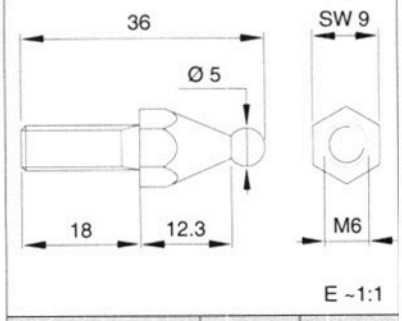

type	g/100pces	Material
KB 16A6V-002	840	Steel
Pull Out Strenght ~185 N *3		

Spherical Stud "16"

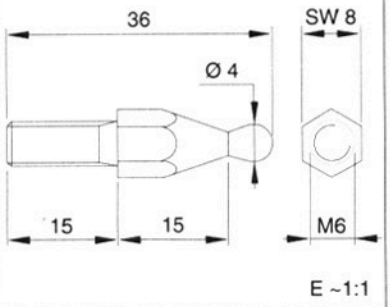

type	g/100pces	Material
KB16A6V-003	840	SZG

Spherical Stud "16"

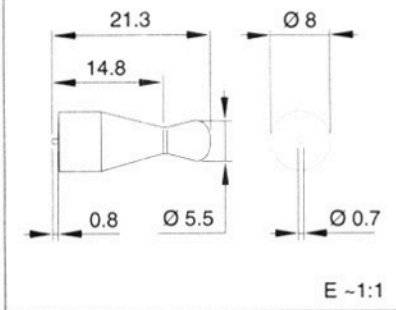

type	g/100pces	Material
KB16S-001	500	Stainl.
Pull Out Strenght ~85 N *3		

* Other Dimensions, Materials, Finish on Request, *1 Pull Out Strenght with Clip C 08, *3 Pull Out Strenght with Clip C 16

EUROPA FASTENERS GmbH
Otto-Hahn Straße 10 · D-71083 Herrenberg
Phone: +49 7032 93 84 0 · Fax: +49 7032 93 84 41
info@eufa.de · www.europa-fasteners.com

Spherical Stud "16"

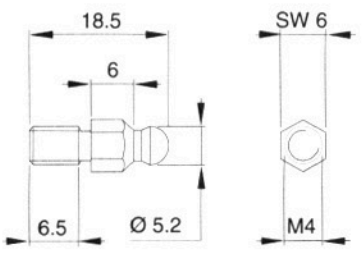

E ~1:1

type	g/100pces	Material
SBV1701	270	Steel

Spherical Stud "16"

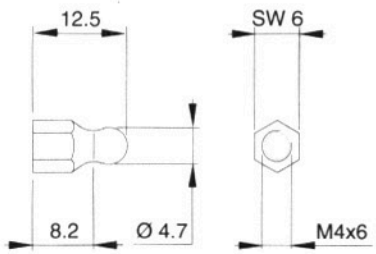

E ~1:1

type	g/100pces	Material
SBV1700M4X12.5	138	Steel

* Other Dimensions, Materials, Finish on Request, *1 Pull Out Strenght with Clip C08, *3 Pull Out Strenght with Clip C16

EUROPA FASTENERS GmbH
Otto-Hahn Straße 10 · D-71083 Herrenberg
Phone: +49 7032 93 84 0 · Fax: +49 7032 93 84 41
info@eufa.de · www.europa-fasteners.com